NASA/CR—2018–219736

Isolated Rotor Forward Flight Testing at Martian Atmospheric Density Data Report

Geoffrey A. Ament, Witold J. F. Koning, and Brenda Natalia Perez Perez
Science and Technology Corporation
Ames Research Center, Moffett Field, California

May 2019

NASA STI Program ... in Profile

Since its founding, NASA has been dedicated to the advancement of aeronautics and space science. The NASA scientific and technical information (STI) program plays a key part in helping NASA maintain this important role.

The NASA STI program operates under the auspices of the Agency Chief Information Officer. It collects, organizes, provides for archiving, and disseminates NASA's STI. The NASA STI program provides access to the NTRS Registered and its public interface, the NASA Technical Reports Server, thus providing one of the largest collections of aeronautical and space science STI in the world. Results are published in both non-NASA channels and by NASA in the NASA STI Report Series, which includes the following report types:

- TECHNICAL PUBLICATION. Reports of completed research or a major significant phase of research that present the results of NASA Programs and include extensive data or theoretical analysis. Includes compilations of significant scientific and technical data and information deemed to be of continuing reference value. NASA counterpart of peer-reviewed formal professional papers but has less stringent limitations on manuscript length and extent of graphic presentations.

- TECHNICAL MEMORANDUM. Scientific and technical findings that are preliminary or of specialized interest, e.g., quick release reports, working papers, and bibliographies that contain minimal annotation. Does not contain extensive analysis.

- CONTRACTOR REPORT. Scientific and technical findings by NASA-sponsored contractors and grantees.

- CONFERENCE PUBLICATION. Collected papers from scientific and technical conferences, symposia, seminars, or other meetings sponsored or co-sponsored by NASA.

- SPECIAL PUBLICATION. Scientific, technical, or historical information from NASA programs, projects, and missions, often concerned with subjects having substantial public interest.

- TECHNICAL TRANSLATION. English-language translations of foreign scientific and technical material pertinent to NASA's mission.

Specialized services also include organizing and publishing research results, distributing specialized research announcements and feeds, providing information desk and personal search support, and enabling data exchange services.

For more information about the NASA STI program, see the following:

- Access the NASA STI program home page at http://www.sti.nasa.gov

- E-mail your question to help@sti.nasa.gov

- Phone the NASA STI Information Desk at 757-864-9658

- Write to:
  NASA STI Information Desk
  Mail Stop 148
  NASA Langley Research Center
  Hampton, VA 23681-2199

NASA/CR—2018–219736

Isolated Rotor Forward Flight Testing at Martian Atmospheric Density Data Report

Geoffrey A. Ament, Witold J. F. Koning, and Brenda Natalia Perez Perez
Science and Technology Corporation
Ames Research Center, Moffett Field, California

National Aeronautics and
Space Administration

Ames Research Center
Moffett Field, CA 94035-1000

May 2019

ACKNOWLEDGMENTS

The authors would like to thank Farid Haddad for his expertise in electronics and controls during experimental setup, Ken Smith for operation of the PAL vacuum facility, Eduardo Solis for scanning the 40x22 AWT rotor for RotCFD simulation, Larry Meyn for his expertise with the data reduction, Larry Young for originally inspiring the idea of forward flight testing under Martian conditions, and William Warmbrodt for his continued support and guidance on the project. Lastly, a thank you to the 2016–2017 Aeromechanics Interns for their support during data collection.

Available from:

NASA STI Support Services
Mail Stop 148
NASA Langley Research Center
Hampton, VA 23681-2199
757-864-9658

National Technical Information Service
5301 Shawnee Road
Alexandria, VA 22312
webmail@ntis.gov
703-605-6000

This report is also available in electronic form at

http://ntrs.nasa.gov

TABLE OF CONTENTS

LIST OF FIGURES v
LIST OF TABLES v
NOMENCLATURE vi
SUMMARY 1
INTRODUCTION 1
TEST FACILITY 2
Planetary Aeolian Laboratory 2
Martian Surface Wind Tunnel 2
TEST INSTALLATION, HARDWARE, AND DATA COLLECTION 4
Hardware Installation 4
Test Hardware 5
Data Collection 8
POST-PROCESSING 8
Data Acquisition 8
Initial Post-Processing 9
Zero Corrections 9
Weight Tares 10
Aerodynamic Tares 10
Torque Tares 11
Force and Moment Calculations 11
Rotor Configurations 12
Drag and Side Force Contributions to Measured Moments 13
EXPERIMENTAL CHALLENGES 13
PAL Chamber Recirculation 13
PAL Chamber Pressure Regulation 14
Motor Thermal Effects 14
Rotor Vibration at Resonant Frequencies 14
Load Cell Hysteresis 15
Load Cell Sensitivity and Range 15

TABLE OF CONTENTS (cont.)

PRESENTED DATA 15
Pressure Decrease 16
Constant Pressure 16
Pressure Drift 17
Pressure Increase 17
CONCLUSIONS 18
FUTURE WORK 18
Wind Tunnel Construction 18
REFERENCES 19

APPENDIX A—ISOLATED ROTOR HARDWARE TECHNICAL DRAWINGS 21
APPENDIX B—CORRECTED DATA 35

LIST OF FIGURES

Figure 1. Planetary Aeolian Laboratory (PAL). 3
Figure 2. PAL Martian Surface Wind Tunnel. 3
Figure 3. Left and right images show single- and dual-rotor configurations tested in the MARSWIT test section, respectively. 4
Figure 4. Left image shows single rotor at 0-degree shaft angle; right image shows single rotor at –14-degrees shaft angle. 4
Figure 5. Single rotor at –14-degrees shaft angle, looking downstream of the test section. 5
Figure 6. Side profile of the 43-foot-long MARSWIT. 5
Figure 7. Hardware and sensor installation within the MARSWIT test section. 6
Figure 8. Weight tare values for load cells 1, 2, and 3. 10
Figure 9. Load cell locations. Bolt holes are on a radius of 5.455 inches. 11
Figure 10. Rotor thrusting up in forward flight, view from ceiling. 12
Figure 11. Drag contribution to pitching moment, body axis system. 13

LIST OF TABLES

Table 1. Weight tare fit coefficients with standard deviations. 11
Table 2. Executed test matrix for both single- and stacked-rotor configurations. 15
Table 3. Test RPMs for each configuration, as PAL pressure was evacuated. The exact pressure the chamber was evacuated to varied throughout testing. 16
Table 4. RPM tested for single and stacked rotors as pressure was held constant. 16
Table 5. RPM for each configuration, as PAL pressure was constant. Note, the listed pressure represents the maximum range tested between dual and single rotors tested. 17
Table 6. RPM for each configuration, as PAL pressure was evacuated. Note, the listed pressure represents the maximum range tested between dual and single rotors tested. 17

NOMENCLATURE

MARSWIT	Martian Surface Wind Tunnel
NA	Not available
PAL	Planetary Aeolian Laboratory
point	Point number within a run during testing
run	Run number during testing
SVS	NASA Ames Thermal Physics Facility's Steam Vacuum System
C_{Mx} [~]	Roll moment coefficient
C_{My} [~]	Pitch moment coefficient
C_P [~]	Power coefficient
C_T [~]	Thrust coefficient
D	Rotor drag force, lbf
FM [~]	Figure of merit
M_{tip} [~]	Advancing tip Mach number
Mx [in-lb]	Roll moment, in-lb
My [in-lb]	Pitch moment, in-lb
n [~]	Number of propellers fixed to the rotor shaft during testing
P [hp]	Power, hp
P [millibar]	Chamber pressure in the PAL, millibar
Pi [hp]	Ideal power, hp
Q [ft-lb]	Torque applied by the motor, ft-lb
Re.75 [~]	Reynolds number at a radial station of 0.75
RPM [~]	Rotor angular velocity, RPM
S [lb]	Rotor side force, lbf
T [F]	Temperature in the PAL, ºF
T [lb]	Thrust measured by load cells, lbf
V [ft/s]	Free-stream velocity, ft/s
ν [ft2/s]	Kinematic viscosity of air, ft2/s
φ [deg]	Azimuth angle of thrust vector location, measured counterclockwise from 0º azimuth
ρ [lb/ft3]	Air density in the PAL, lb/ft3

ISOLATED ROTOR FORWARD FLIGHT TESTING AT MARTIAN ATMOSPHERIC DENSITY DATA REPORT

Geoffrey A. Ament, Witold J. F. Koning, and Brenda Natalia Perez Perez[1]

Ames Research Center

SUMMARY

With the recent interest in Martian exploration using Unmanned Aerial Vehicles (UAVs), an experimental study was conducted to investigate rotor performance at Martian atmospheric conditions. Both simulation and testing of rotors is vital for evaluating rotor performance and behavior, especially for operations at Martian atmospheric densities and pressures. One critical test that has not been performed to date is helicopter forward flight testing at Martian atmospheric densities. To achieve this, a test was conducted in a tunnel facility that could be evacuated to the atmospheric pressure and density of Mars. A 40-inch-diameter rotor, roughly approximating the scale of the proposed Mars Helicopter (MH) design by the NASA Jet Propulsion Laboratory (JPL), was tested in forward flight at Mars' atmospheric pressure at the NASA Ames Planetary Aeolian Laboratory (PAL). In this forward flight testing, the drive system of the Martian Surface Wind Tunnel (MARSWIT) was never turned on; all wind speeds read were generated either through the rotor spinning or from facility effects. The goal of this experiment was to collect rotor thrust, rotational speed, power, torque, and acoustics measurements. Subsequently, these results can be used for correlation with simulated cases using a mid-fidelity Computational Fluid Dynamics (CFD) simulation. As expected, rotor thrust and power are drastically reduced at air densities 100 times lower than at sea level on Earth. In addition, Reynolds number effects seem to play a vital role at reduced pressure that cannot be neglected in the simulation.

INTRODUCTION

In the interest of exploring and learning more about our solar system, NASA has executed several unmanned missions to Mars. Among these successes, various missions to Mars have allowed for close examination of the Martian surface, and one rover is still in operation today. Unfortunately, because of Mars' rocky terrain and communication delays between Earth and Mars, it can be difficult to efficiently move around on the Martian surface. In an effort to help resolve these issues, the NASA Jet Propulsion Laboratory (JPL) is developing a Mars Helicopter (MH) in collaboration with AeroVironment Inc., NASA Ames Research Center, and NASA Langley Research Center, to create a low-altitude Unmanned Aerial Vehicle (UAV) to scout in the vicinity of the rover and explore the red planet [1].

[1] Science and Technology Corporation, NASA Research Park, Moffett Field, CA 94035.

Considering how drastically gravity and atmospheric conditions differ between Earth and Mars, many obstacles must be overcome when designing a flight vehicle for Martian exploration. Because the gravity on Mars is roughly one-third that of Earth's, a flight vehicle weighs less on Mars than on Earth; consequently, a flight vehicle would need less thrust to become airborne. However, the reduced thrust required from a lighter vehicle is undermined by the drastic reduction in atmospheric density, which is around 100 times less than that of Earth. In addition, the reduction in temperature, specific heat ratio, and atmospheric gas constant reduce the speed of sound considerably. Further, the low Reynolds number for a rotor operating in a Martian atmosphere has a high impact on rotor performance because of possible early flow separation on the blade [2].

TEST FACILITY

Planetary Aeolian Laboratory

The Planetary Aeolian Laboratory (PAL) is a 98.5-foot-high, 141,259-cubic-foot near-vacuum facility capable of conducting experiments under atmospheric conditions ranging from Earth's atmosphere, approximately 1 bar (1018 millibars), down to 5.5 millibars [3], which is less than the atmospheric pressure of Mars. The facility can be evacuated to its minimum pressure of 5.5 millibars in about 45 minutes, an operation performed by the NASA Ames Thermal Physics Facility's Steam Vacuum System (SVS) [3].

At all atmospheric conditions, the PAL chamber composition is that of Earth's; for noncritical Mach numbers, differences between Earth's (primarily O_2 and N_2) and Mars' (primarily CO_2) atmosphere are thought to be negligible. That said, it is expected that the 100-fold change in density will completely offset the comparatively small change in viscosity, specific heat ratio, and gas constant due to the change of gas type. Because of the high cost to evacuate the PAL, the majority of the PAL testing is done in conjunction with other NASA Ames projects already requiring vacuum; in doing so, the windows of time allotted to PAL vacuum testing are often based on dual-use opportunities. Although not pursued for this project, vacuum testing can be dedicated to the PAL if sufficient funding is in place, allowing for extensive low-pressure testing. The PAL is shown in Figure 1.

Martian Surface Wind Tunnel

The Martian Surface Wind Tunnel (MARSWIT), shown in Figure 2, was first put into operation in 1976 and is an open-circuit 43-foot-long atmospheric boundary-layer wind tunnel. The internal cross section is 3.3 feet (height) by 4 feet (width) [4]. As the MARSWIT is in the PAL near-vacuum chamber, the wind tunnel can be tested at all atmospheric conditions of which the facility is capable; at approximately 1000 millibars, the wind tunnel can reach wind speeds of 34.5 ft/s, and at 5 millibars, wind speeds of 328 ft/s. MARSWIT has been used to investigate the physics of particle entrainment under Martian conditions, testing of spacecraft instruments under Martian conditions [4], and recently to test rotor performance. All test data presented in this paper were acquired with the wind tunnel drive system turned off.

Figure 1. Planetary Aeolian Laboratory (PAL).

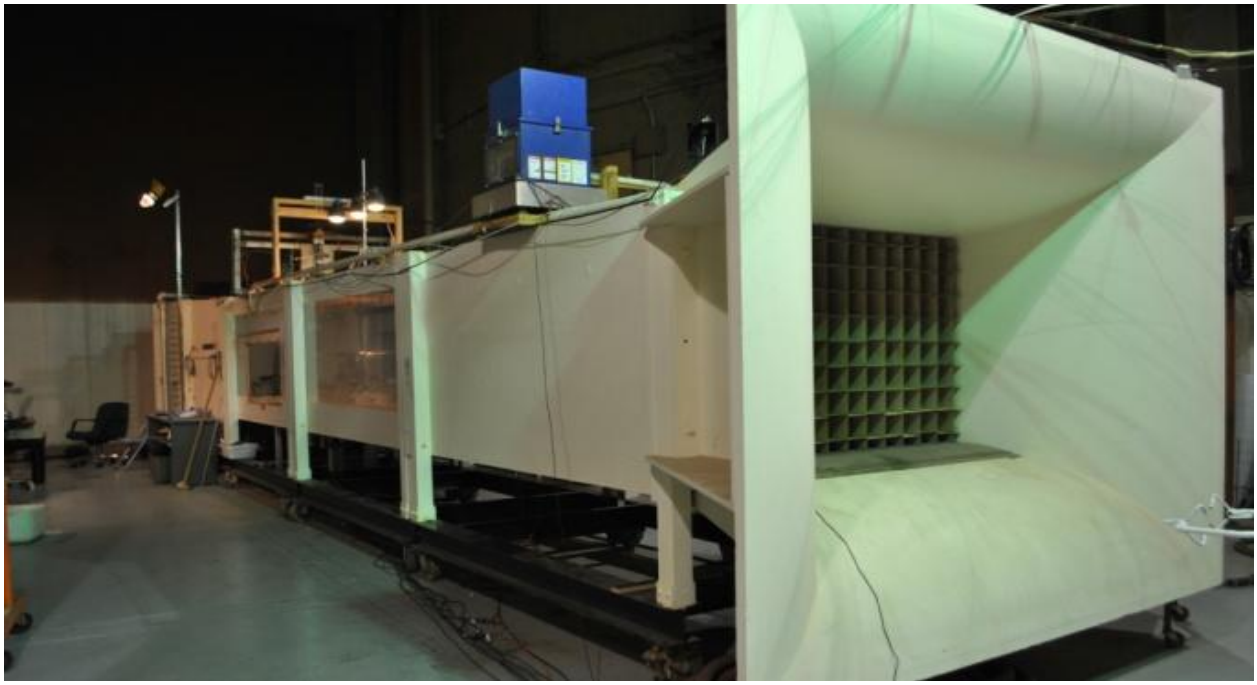

Figure 2. PAL Martian Surface Wind Tunnel.

TEST INSTALLATION, HARDWARE, AND DATA COLLECTION

Hardware Installation

Test hardware was installed into the MARSWIT test section, approximately located midway along the 43-foot-long wind tunnel. Testing consisted of both single-rotor and dual-rotor configurations. The single rotor was to test a rotor in nominal helicopter mode. The dual rotor was to resemble the MH's coaxial design, as well as to provide increased rotor thrust representative of the MH design. However, unlike the MH's coaxial system, both rotors in the dual configuration are fixed, rotating in the same direction, at 90-degree orientation. Both the single- and dual-rotor configurations are shown in Figure 3.

Test hardware was designed such that the rotor could be tested between ±14 degrees angle of attack. For the presented data, all tests were conducted at –14 degrees, pitching the test apparatus towards the tunnel inlet. Figure 4 shows the single-rotor configuration at 0 and –14 degrees (forward flight). Figure 5 shows the rotor again at –14 degrees, but from downstream of the test section.

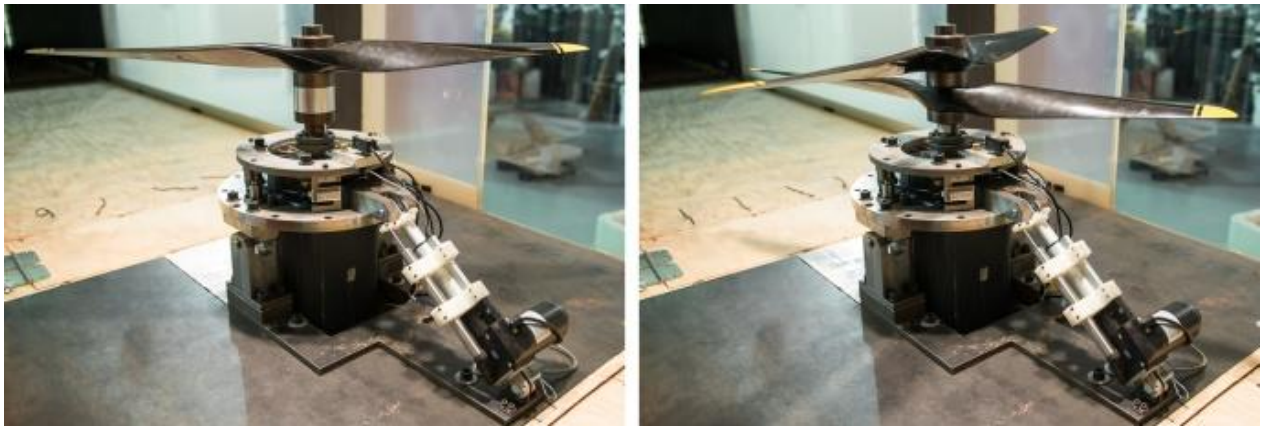

Figure 3. Left and right images show single- and dual-rotor configurations tested in the MARSWIT test section, respectively.

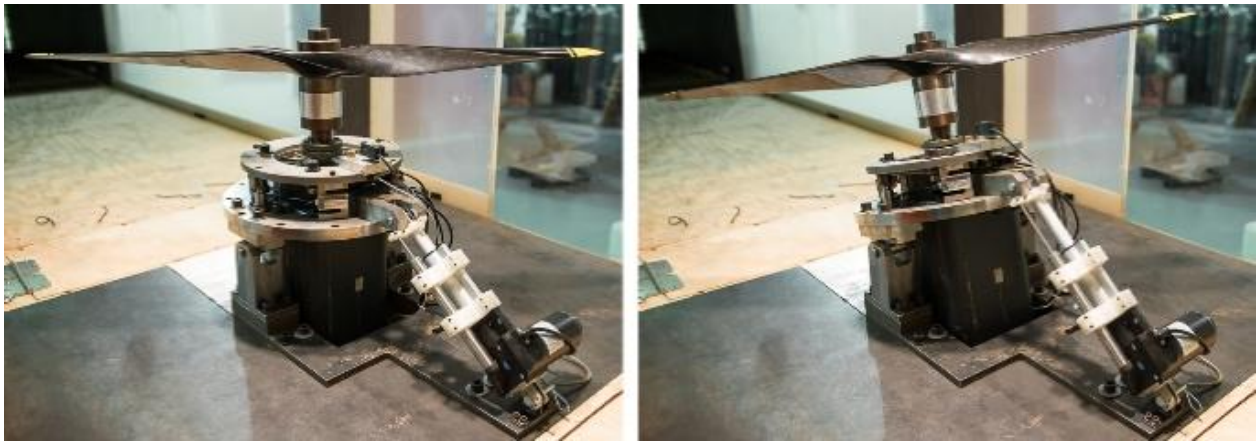

Figure 4. Left image shows single rotor at 0-degree shaft angle; right image shows single rotor at –14-degrees shaft angle.

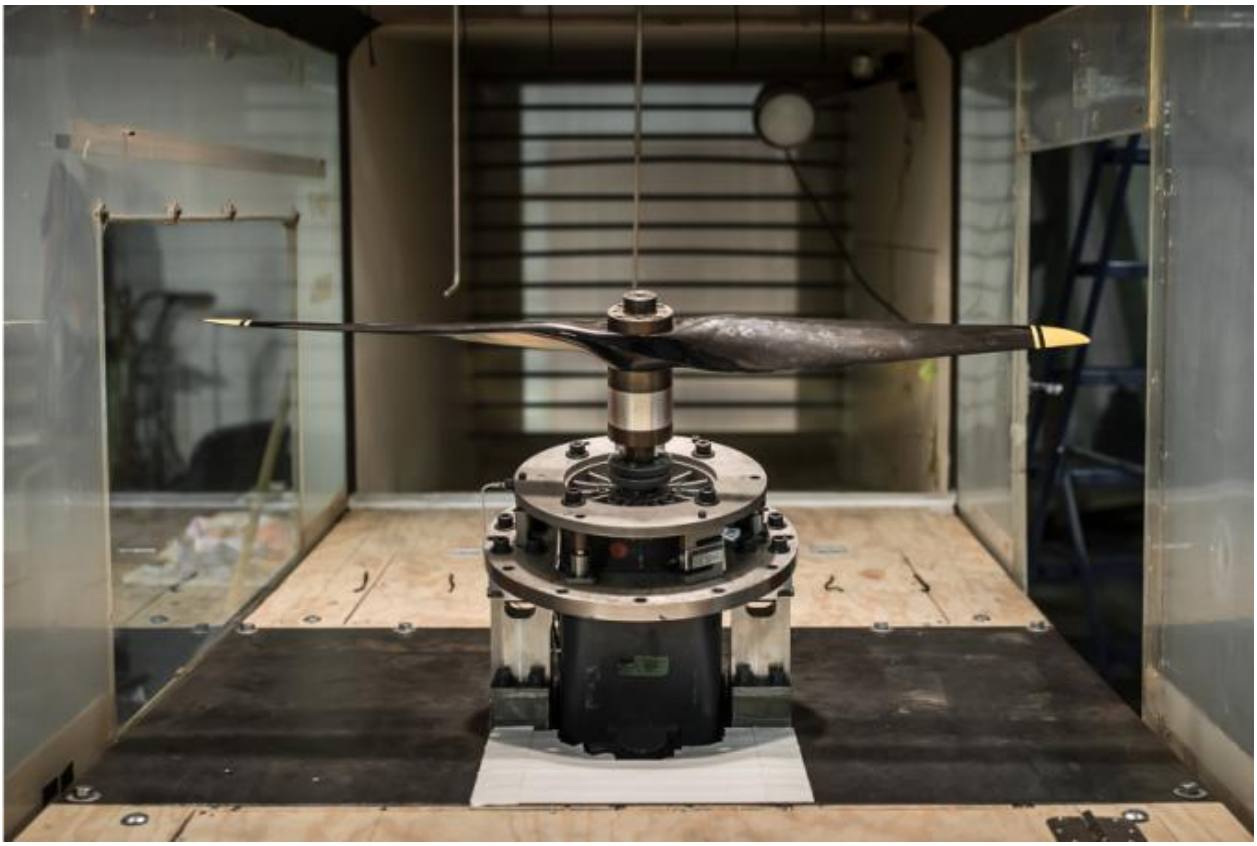

Figure 5. Single rotor at –14-degrees shaft angle, looking downstream of the test section.

Testing was conducted from a pressure range of 1 atmosphere (Earth's atmosphere) down to 8 millibars (conditions that approximate the atmospheric conditions found on Mars).

Test Hardware

The primary goals were to collect rotor thrust, RPM, power, torque, motor temperature, and wind speed, as well as chamber pressure, humidity, and temperature, while in forward flight. The following sections discuss the hardware and sensors used to obtain this data, and reference Figure 6 and Figure 7 for location within the MARSWIT.

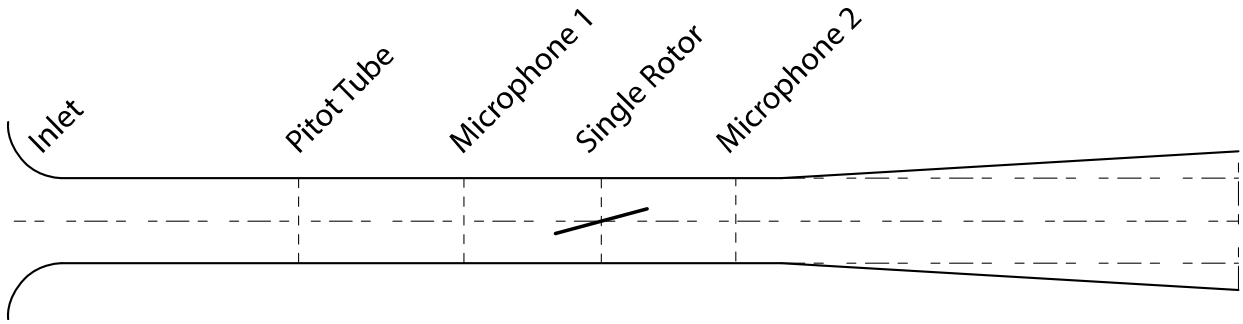

Figure 6. Side profile of the 43-foot-long MARSWIT.

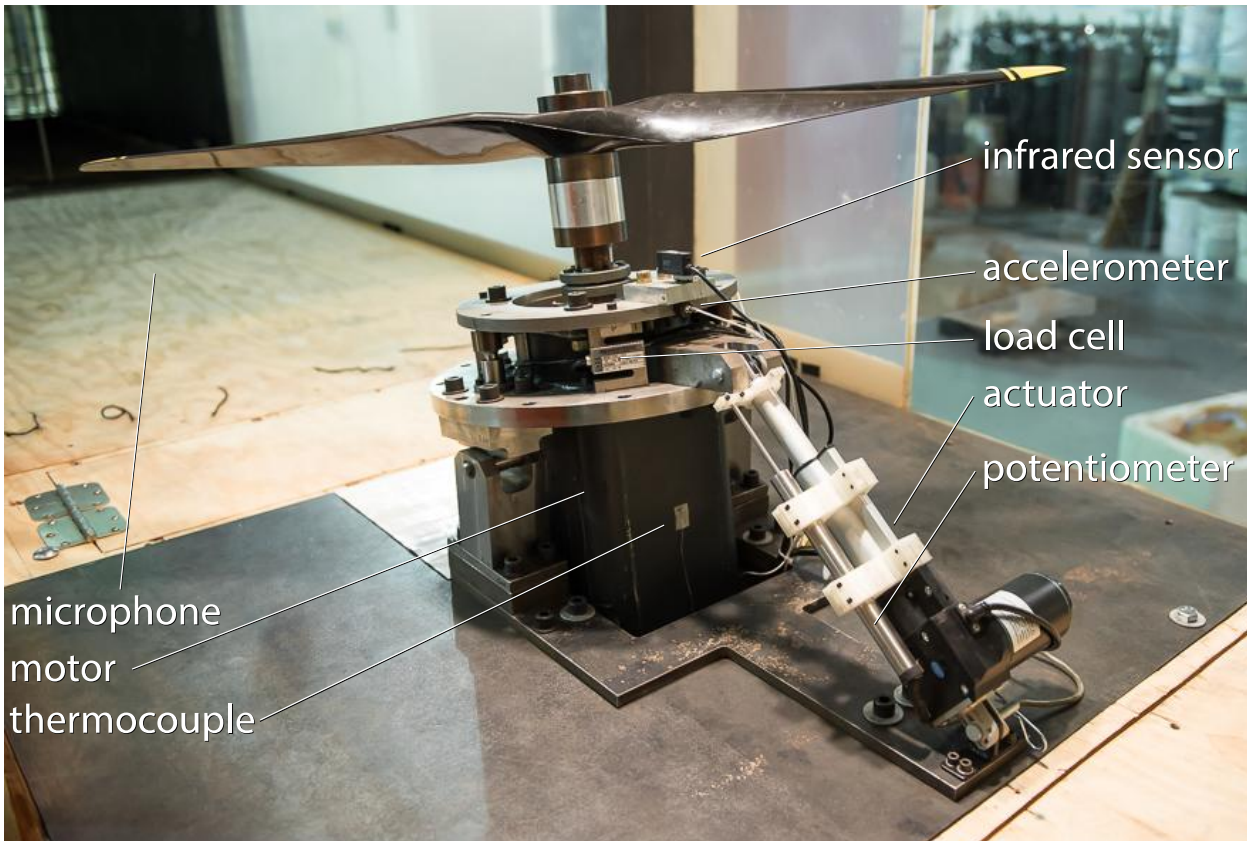

Figure 7. Hardware and sensor installation within the MARSWIT test section.

Prior to MH testing in the JPL 25-Foot Space Simulator, a 1-atmosphere rotor hover safety checkout needed to be conducted within the chamber. As part of this effort, the 40x22 rotor was selected in 2015, and tested for this activity [5].

To provide a better understanding of what the MH might experience during forward flight on Mars, the selected rotor was chosen based on the MH's physical dimensions and operating conditions. The projected MH will be equipped with a coaxial rotor system, with rotor disks approximately 3.94 feet in diameter. However, because of restrictions in MARSWIT test section dimensions, the largest testable rotor was limited to 3.33 feet in diameter, approximately 0.65 feet smaller than what will be installed on the MH. In addition to rotor diameter, the selected rotor was chosen to be operational up to 3000 RPM to match the RPM and hover tip Mach number of the proposed MH.

The selected rotor is highly twisted and defined by the manufacturer as 40x22. The first number represents the rotor diameter in inches. The second number refers to the forward distance traversed, in inches, for every rotor revolution when acting as a propeller [6].

The motor used for rotor operation is the Siemens Electric AC Motor, model 1FT5104-0AF71-I. This motor was selected for the first-ever Martian atmosphere rotor hover testing in 2002, which also took place in the PAL near-vacuum chamber [7]. Because this motor was proven to operate

extensively under vacuum, it was chosen again for this test. Measurements included RPM based on a motor encoder and torque based on motor current; both RPM and torque were recorded by the Data Acquisition System (DAS). A thermocouple was mounted to the motor for motor temperature monitoring.

An Omron E3S-AR11 infrared (IR) sensor was used during testing. This is a built-in amplifier photoelectric feedback sensor, which was used to indicate motor RPM. Reflective tape, adhered to the motor shaft, reflects the IR signal once per motor revolution. This sensor was only used to monitor RPM while testing and was not recorded.

To measure rotor thrust, the motor is fixed to three Sensortronics S-Beam load cells, model 60001. Each load cell is single axis and can measure up to 50 pounds within a safe margin. The collective 150-pound measurable weight is required to accommodate the dead weight of the motor and rotor hardware. The load cells were mounted 120 degrees apart about the rotor's axis of rotation.

At 1 atmosphere, rotor thrust is much larger than that at reduced pressure. As the PAL is evacuated to Martian pressures, the atmospheric density within the chamber is approximately 100 times less than when at 1 atmosphere. Consequently, the load cells are operating at their minimum specifications when measuring thrust at extremely low chamber pressures. This is discussed further in the Experimental Challenges section of this paper.

MARSWIT wind speed is determined from a 1-millibar differential pressure transducer attached to a pitot-static probe, located forward of the test section. The transducer, a model Barocell-590, was on a heated plate located in the PAL control room to minimize temperature drift. Wind speed is measured only in the direction of air entering the MARSWIT inlet.

To determine the test hardware structural resonance, a resonant frequency test was performed for each rotor configuration. Within the maximum testable range of 3000 RPM, frequencies with the highest amplitude occur around 1900 RPM for both single- and dual-rotor configurations.

Vibrations were monitored throughout testing by two uniaxial 5g Kistler accelerometers mounted 90 degrees apart, on a plane perpendicular to the axis of rotation. Accelerometer installation was for the sole purpose of monitoring amplitude throughout testing, particularly around determined resonant frequencies.

Acoustics measurements (not presented in this paper) were taken by two microphones, placed 60 inches ahead and behind the test section, equidistant from the axis of rotation. The microphones and amplifiers are part of a G.R.A.S. Sound & Vibration System.

Absolute chamber pressure, density, humidity, and temperature sensors located in the PAL vacuum chamber were used for this test. The Setra 204 absolute pressure transducer and a Wallace and Tiernan FA129 absolute pressure gauge were used to measure chamber pressure for pressures ranging from 1 atmosphere to around 5.5 millibars. One MKS Baratron 627F 0- to 13-millibars absolute pressure transducer is used when low pressures are reached. Lastly, humidity and temperature were measured by a Vaisala DMP248.

Data Collection

All sensor cables bridge the vacuum chamber wall to the PAL control room, where they are recorded to one of two data systems, an AstroMed Dash 18X (AstroMed) and a PAL LabVIEW system. The AstroMed is a 14-bit DAS used for real-time monitoring and data recording, with real-time sensor calibration and filter application. Rotor thrust, RPM, power, torque, acoustics, wind speed, and stand vibration were recorded to this system. The PAL LabVIEW system recorded absolute chamber pressure, density, humidity, and temperature. In addition to the PAL digital readout of chamber pressure, pressure was also manually recorded from a separate torr gauge.

POST-PROCESSING

Post-processed data records are merged based on the time-stamp of each DAS described prior. Once merged, the data undergoes zero-point subtraction of load cell weight, torque, and acoustic tares. Periodic zero-point subtraction became particularly important when measuring rotor thrust, as the three load cells demonstrated drift during extended operation; routine zero-points helped capture and mitigate this behavior.

In addition to zero-point subtraction, an additional correction method was applied to torque measurements. Torque measurements collected without propellers installed were subtracted from measurements taken with blades installed. This process eliminated the added torque required to rotate the motor. This method was particularly important when measurements were taken below 30 millibars when the rotors consumed minimal power.

Data Acquisition

There were three data acquisition sources used during the test: an Astro-Med DASH-18 was used to acquire measurements of model instrumentation; an N242 facility data system was used to acquire facility measurements; and a manually recorded run log wasused to record model configuration and select facility measurement values, as well as notes about recorded points when needed. Both the N242 facility data system and Astro-Med DASH-18 internally process their acquired data signals to save data in engineering units rather than as voltages.

Astro-Med DASH-18 was set to record channels simultaneously at two different sampling rates, a standard and a slow rate. The standard rate was either 200 Hz or 100,000 Hz and the slow rate was either 100 Hz or 200 Hz, respectively. 100,000 Hz was used to support acoustic measurements. N242 resident data system recorded data at approximately 3 Hz.

N242 facility data system and Astro-Med DASH-18 were independent systems with independent operators. Synchronization between the systems occurred when the operators would initiate dataset recording at the same time based on a verbal cue. Data file names for the two systems were also independent, so correlation between datasets was determined by log records of the initial and ending N242 dataset file names in a run and by comparing time stamps of the dataset files from both systems. Although the N242 resident data system was always operational for monitoring facility conditions, datasets were not always acquired for each record point acquired

by Astro-Med DASH-18. For record points missing an N242 dataset, the run log was used to provide tunnel conditions.

Data was acquired for a predetermined series of runs with points for specific model and facility settings. However, since tests always have run-time issues, some of the points had to be repeated and some additional data record points were acquired that did not have point numbers assigned. To allow for easy identification of individual point datasets, each dataset was assigned a unique run and sequence number pair. The run number was the same as specified in the run log, but the sequence numbers were based on the ordinal sequence in which the point datasets were acquired. For clarity, the final run and sequence numbers presented in this report have been renumbered.

Initial Post-Processing

Datasets acquired from the N242 facility data system and Astro-Med DASH-18 contain time histories of their measurement channels in engineering units. Step one in post-processing is to read all of the time history datasets from both systems and create summary databases where each row contains the means and standard deviations for each channel; following this, a file name and time stamp is created for each data point. The information from the run logs are read in from Excel spreadsheets created for each log and used to create a single, combined log table. A log configuration file is used in this process to resolve formatting and column name differences between individual logs.

Run and point numbers are used to match log data and Astro-Med DASH-18 data. The N242 facility data system uses a different numbering scheme, so time stamps are used to match N242 system points with Astro-Med points. A dry run is performed to sync the three databases to determine if there are problems that need to be corrected. The most common problem is inconsistencies in the logs, which are managed by editing the logs to resolve them. Only data means and standard deviations are included in the merged database.

Zero Corrections

Zero record points were taken, but the run schedule and facility constraints did not allow their acquisition at the beginning and end of each run. The purpose of a “zero” record point is to determine the change in measurement values from values obtained at a reference condition, which is currently defined as zero tunnel wind speed, zero rotor RPM, and the model set to a 0-degree angle. For selected measurements, the zero value is subtracted from all measurements obtained during the run in which the zero was recorded and for subsequent runs if no new zeros were obtained. Three types of zero corrections are used depending on the availability of zero and static points. The three types are: “beginning” zero corrections in which the values for a zero/static point are subtracted from subsequent points, “ending” zero corrections in which the values for a zero/static point are subtracted from previous points, and “both” zero corrections in which the interpolated values from beginning and ending zero/static points are subtracted from points taken in between. Interpolation is based on the data point record time.

Weight Tares

Weight tares are the changes in loads measured by loads cells due to shifting weight of the model as the angle is changed in the absence of aerodynamic forces. Measurements of these tares, after zero corrections were made, are presented in Figure 8. As expected, the number of props installed does make a small difference on the magnitude tare loads. Load cell 3 is located on the pivot axis (see Figure 9), resulting in somewhat higher noise levels. Load cell force measurement has estimated tare force subtracted after the zero corrections are applied. Tare estimates are made using the fit equation, $\text{Tare} = S1*(1.0-\cos(\alpha)) + S2*\sin(\alpha)$. Coefficients for the load cell curve fits and the fit standard deviations are presented in Table 1.

This weight tare fit is not applied when the angle of the zero record point is the same as the point being analyzed. All data presented in this report was collected at –14 degrees. Therefore, this weight tare fit is not applied to the presented data.

Aerodynamic Tares

Corrections for aerodynamic tares were considered. These would be forces on the model that occur with positive wind speed and no props installed. Two characteristics were expected: first the tares should be proportional to dynamic pressure, and second, that the tare forces should have some symmetry about the 0-degree tilt angle. Neither of these expectations seemed evident in the data, so it may be that the tare forces were masked by data scatter. It was therefore decided not to calculate and apply aerodynamic tares at this time.

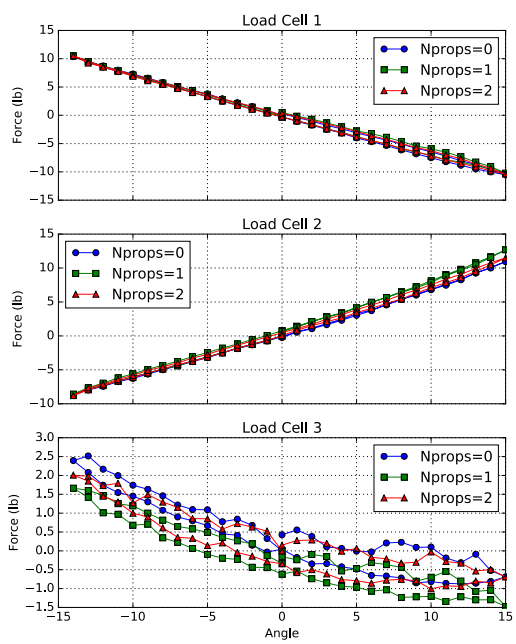

Figure 8. Weight tare values for load cells 1, 2, and 3.

Table 1. Weight tare fit coefficients with standard deviations.

Nprops	Load Cell	S1	S2	Sigma (lb)
0	1	11.99386754	–40.13675701	0.358695099
0	2	27.11330234	37.90820162	0.131569142
0	3	33.50985781	–6.215704452	0.318109694
1	1	17.06010815	–39.7085289	0.403321397
1	2	65.84885034	40.32774456	0.441892038
1	3	0	–5.495353688	0.333470585
2	1	10.07770625	–40.08493139	0.339950515
2	2	41.14243824	38.40839435	0.300244256
2	3	22.76007772	–5.412475948	0.319728605

Torque Tares

After zero corrections and weight tare corrections, torque tares were considered. Baseline torque required to spin the motor with no propellers installed was monitored throughout the RPM range. The average torque over the RPM range was used as generic torque tare and was subtracted from all measurements.

Force and Moment Calculations

The helicopter test apparatus is mounted on three vertically oriented load cells, which are positioned as shown in Figure 9. Bolt holes for the load cells are on a circle with a radius of 5.455 inches, which is normal to and centered along the rotor shaft axis. Load cells are mounted below the model and remain perpendicular to the shaft axis as the model is rotated in pitch. Negative shaft angle is defined as tilting the shaft into the wind.

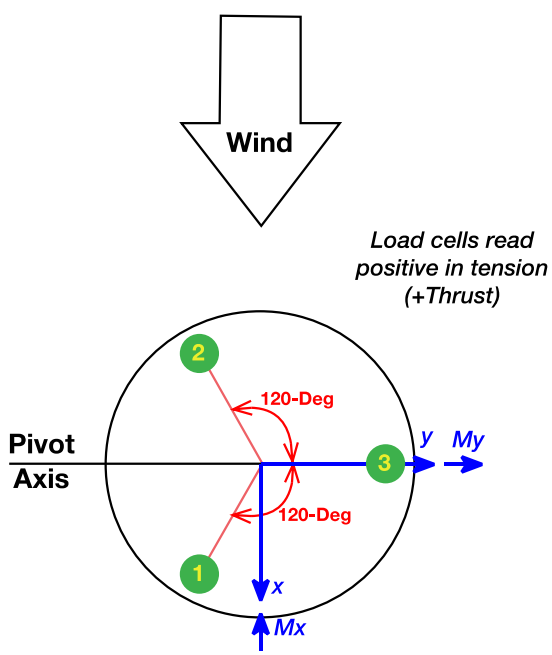

Figure 9. Load cell locations. Bolt holes are on a radius of 5.455 inches.

Load cells read positive in tension, which is confirmed by the recorded weight tares that show load cell #1 having a more positive reading when the pitch is at –14 degrees (tilted into the wind) and load cell #2 having a more negative reading at that pitch angle (see Figure 8). When the propellers were configured to thrust towards the base (thrust down), then increasing RPM produces increasing negative thrust that will produce more negative load cell values. It should be noted that moment values include contributions from side force and drag due to their application occurring at a point several inches above the load cells. It is not possible to remove these contributions since there are no measurements of side force or drag.

Rotor Configurations

The rotor in nominal forward flight, thrusting-up configuration is shown in Figure 10. All sign conventions are the same for both configurations, except for torque, which is positive for all positive RPMs.

The presented sign conventions and definitions are in association with a rotor thrusting up, and can be applied to all data presented in this report. The angle of attack of the rotor disk, or equivalently, the geometric shaft angle, is defined such that the rotor disk is at 0 degrees when horizontal. When the front of the disk (facing upstream) pitches upwards, the angle of attack is increased, effectively pointing the thrust vector more downstream. All data presented in this report was performed at –14 degrees geometric shaft angle, so the thrust vector points partially upstream. Positive axis directions and resulting positive moment directions are illustrated in Figure 10.

Azimuth angle of thrust vector location, φ, is calculated by calculating the angle between the Mx and My components, measured counterclockwise from 0-degree azimuth.

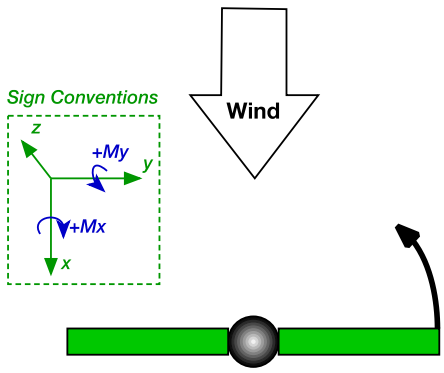

Figure 10. Rotor thrusting up in forward flight, view from ceiling.

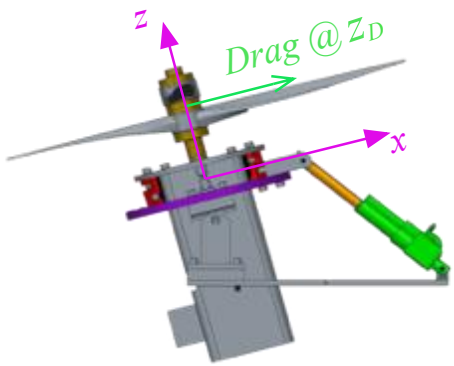

Figure 11. Drag contribution to pitching moment, body axis system.

Drag and Side Force Contributions to Measured Moments

Load cells are aligned with the rotor shaft, so in the body-axis system they measure thrust, but no component of either drag or side force. However, drag will contribute to measured pitch moments, My, and side force will contribute to measured roll moments, Mx. Since there are no measurements of drag and side force, their contributions to pitch and roll moments can only be estimated using analytic or computational predictions of drag and side force. The rotor in nominal forward flight is shown in Figure 11 with the drag force vector shown in the body axis system. This shows that the contribution to pitching moment, My, due to drag is D * ZD, where D is the magnitude of the drag and ZD is the moment arm, along the z-axis, from where drag is applied to the centers of the load cells. In a similar manner, side force, S, contributes to the measured rolling moment, Mx. Note that model weight makes no contribution if the data is corrected for zeros and weight tares.

EXPERIMENTAL CHALLENGES

Listed in the order of most to least prominent, rotor thrust measurements were determined to be affected by chamber recirculation within the PAL, PAL chamber pressure regulation, thermal effects from the tested motor, rotor vibration at resonant frequencies, hysteresis, and load cell sensitivity and range. Subsequent sections discuss the extent to which each affected load cell measurements.

PAL Chamber Recirculation

At the start of single- or dual-rotor tests, the rotor is set to a forward flight angle of –14 degrees. Given the large rotor size relative to MARSWIT test section dimensions, tested rotors were shown to pull a substantial amount of air through the wind tunnel, with the exception of runs conducted while pressure in the PAL chamber is being evacuated.

While pressure is reduced from 1018 millibars down to less than 30 millibars in 45 minutes, rotor RPM was held constant throughout the entire pump-down. Because rotor thrust decreased linearly with chamber pressure, it was shown previously that for a fixed RPM, induced wind

speeds within the MARSWIT remain fairly constant. However, measured wind speeds were shown to decrease and ultimately reverse direction within the tunnel while chamber pressure was reduced. Additional indications, besides the Barocell-590, that wind direction reverses are the changes in roll and pitch moments. As pressure was being held, wind speed would further fluctuate unless the rotor was run. As pressure increased, although traveling in the correct direction, tunnel wind speed achieved higher velocities than expected, and then decayed as the pressure approached 1018 millibars. These effects were due to how air is let into or evacuated out of the PAL vacuum chamber.

The physical location in which air is pumped out of or into the PAL chamber is in close proximity to the MARSWIT inlet. This causes air to be pulled in the opposite direction of rotor-induced wind flow when the chamber is pumped down, ultimately reversing wind direction in the tunnel; data collected while the chamber is pumped down displays reduced or reversed wind speed and thrust. When pumping air back into the chamber, the opposite occurs; the air released into the chamber (and relatively near the tunnel inlet) is pulled into the tunnel, temporarily increasing wind speed and rotor thrust. As such, numeric data is only analyzed for points collected while pressure was held constant or drifting at 1 millibar per minute, which was shown to have minimal effect.

PAL Chamber Pressure Regulation

Holding constant pressure is a current challenge in the facility. When reduced pressures are reached and the PAL closes a valve that causes disconnection from the SVS, the facility leaks at roughly 1 millibar per minute. Thus, to hold constant pressures, the opening of the valve is regulated by changing voltage in a device until the desired pressure is steady. Currently, there is no automatic device controlling the valve that can rapidly account for the loss of pressure and set the valve to a desired position without continuous variation. Hence, quiescent conditions (desired for data collection at reduced pressures) cannot be achieved while the valve is regulated. To account for this effect and ensure quiescent conditions, multiple zero points are collected when the pressure is held constant before spinning the rotors.

Motor Thermal Effects

Temperature of the motor always affects load cell measurements. Higher motor temperatures correspond to slightly reduced thrust measurements, and lower motor temperatures correspond to slightly increased thrust measurements. To curb this behavior, the motor was heated at the beginning of each test, and maintained at a constant temperature to mitigate thermal drift. That said, rapid changes in chamber pressure had a more significant impact on load cell measurements than motor thermal effects.

Rotor Vibration at Resonant Frequencies

Three 50-pound single-axis load cells were chosen to accommodate the dead weight of the motor and rotor assembly. At 1 atmosphere, the single rotor is capable of producing about 70 pounds thrust, and the dual rotor about 125 pounds thrust. As pressure is reduced, rotor thrust can drop to a fraction of a pound, particularly when pressure is below 14 millibars. Because of this, measured rotor thrust at extremely low atmospheric density and pressures can be disrupted by

stand vibration caused from rotor operation, as load cells are operating at the lower end of their resolution. To help reduce this effect, stand resonant frequencies were identified and specific rotor rotation RPMs were avoided while testing.

Load Cell Hysteresis

Lastly, hysteresis was observed in the three single-axis load cells. This behavior is seen when analyzing data for increasing and decreasing atmospheric pressure or rotor RPM and causes load cells to undergo tension or compression. Because of low thrust, hysteresis is most noticeable at reduced pressure.

Load Cell Sensitivity and Range

The issues listed above can cause measured thrust to vary at crucial pressures simulating Martian density. This is largely because of the load cells reading only a fraction of their range. Although this was appropriate for the purposes of this test, load cells with a smaller range would be best suited for capturing data at extremely low pressures. If such a test were performed, data could only be collected below certain atmospheric conditions as rotor thrust quickly increases as pressure increases.

PRESENTED DATA

Both single- and dual-rotor configurations were tested over a pressure range of 1 bar down to 5 millibars, up to 3000 RPM, and at a fixed forward flight shaft angle of –14 degrees. Runs 1–22 incorporated the stacked-rotor configuration, and Runs 23–43 incorporated the single-rotor configuration. Table 2 outlines the categories data can be broken into.

Table 2. Executed test matrix for both single- and stacked-rotor configurations.

Chamber Test Condition	Test Approach
Pressure Decrease	45-minute pressure decrease from 1000 millibars down to 5 millibars, constant RPM, constant –14-degree rotor shaft angle, wind off.
Constant Pressure	Pressure held constant at 7, 14, and 30 millibars, thrust sweeps between 0 and 3000 RPM, constant –14-degree rotor shaft angle, wind off.
Pressure Drift	Pressure drift at 1 millibar per minute, from 30 to 200 millibars, thrust sweep from 0 to 3000 RPM, constant –14-degree rotor shaft angle, wind off.
Pressure Increase	20-minute pressure increase from approximately 200 millibars up to 1 bar, constant RPM, constant –14-degree rotor shaft angle, wind off.

Pressure Decrease

The PAL can evacuate from 1 bar to 5 millibars in approximately 45 minutes. To measure rotor thrust as a function of decreasing pressure, rotor RPM was held constant for both single- and dual-rotor configurations for the entire pump-down. The RPM chosen for each configuration depends on two things. First, it was chosen to avoid test stand resonance determined through Resonance Assessment Profile (RAP) testing. Second, as rotor thrust and vibration is greatest at 1 bar, monitoring of accelerometer and load cell readings limited maximum RPM for safe MARSWIT testing. Table 3 specifies the rotor test conditions.

Constant Pressure

After the PAL chamber has been evacuated to less than 50 millibars, target pressures to be held constant were 30, 14, and 8 millibars. As evacuation of the PAL is dependent on operation of the SVS, it was best to target the lowest pressures first. Table 4 outlines the test procedure when pressure was held constant.

Constant pressure can occur at 1 atmosphere and when pressure is held at Mars-like conditions. To decrease pressure, the valve connecting SVS to the PAL has to be opened. That said, holding constant pressure is currently a challenge in the facility. When reduced pressures are reached, and the PAL is closed off from the SVS, the facility leaks at roughly 1 millibar per minute. Thus, to hold constant pressures, the facility operator manually regulates the opening of the valve until the desired pressure is steady. However, once manual regulation of the valve ceases, the pressure can deviate up to 5 percent from the target pressure in some instances. Currently, there is no automatic device controlling the valve that can rapidly account for the loss of pressure and set the valve to a desired position without continuous variation.

Table 3. Test RPMs for each configuration, as PAL pressure was evacuated. The exact pressure the chamber was evacuated to varied throughout testing.

Rotor Configuration	Pressure (millibars)	RPM
Dual	~1000 down to 8	1250
Single	~1000 down to 8	2100

Table 4. RPM tested for single and stacked rotors as pressure was held constant.

Rotor Configuration	Pressure (millibars)	RPM
Dual or Single	8 , 14, and 30	0
		2100
		2500
		2800
		3000
		2800
		2500
		2100
		0

Pressure Drift

If vacuum to the PAL is shut off by the SVS, pressure within the PAL can be sustained at an increase of 1 millibar per minute. To provide ample amount of data points while minimizing the amount of pressure drifted, 15-second data record lengths were collected. As PAL pressure evacuation is dependent on the number of other NASA Ames facilities requiring vacuum, the pressure in which SVS disconnects the PAL from vacuum varied throughout the test program. Reynolds number effect on rotor performance was investigated during this pressure drift condition. Test points collected under this test condition are outlined in Table 5.

Pressure Increase

As pressure is increased, the rotor was set to the corresponding RPM it was tested at during the preceding pressure reduction. RPM and test conditions are shown in Table 6.

Table 5. RPM for each configuration, as PAL pressure was constant. Note, the listed pressure represents the maximum range tested between dual and single rotors tested.

Rotor Configuration	Pressure (millibars)	RPM
Dual or Single	7 to 300	0
		2100
		2500
		2800
		3000
		2800
		2500
		2100
		0

Table 6. RPM for each configuration, as PAL pressure was evacuated. Note, the listed pressure represents the maximum range tested between dual and single rotors tested.

Rotor Configuration	Pressure (millibars)	RPM
Dual	300 to 1000	1250
Single	300 to 1000	2100

CONCLUSIONS

Experimental rotor forward flight testing at 1 atmosphere down to Mars' atmospheric pressures was challenging but overall successful for both single- and dual-rotor configurations. Experimental rotor thrust, torque, and power were collected at constant pressures of 8, 14, and 28 millibars, 30 to 200 millibars while pressure drifted at 1 millibar per minute, and at 1 atmosphere. In addition to rotor behavior, rotor-induced wind tunnel velocity was compared from 70 to 200 millibars against results at 1 atmosphere for both single and dual rotors.

FUTURE WORK

Wind Tunnel Construction

To reduce tunnel effects and wind recirculation within the vacuum chamber, test operations can be modified in the future. Facility recirculation effects can be minimized in the measured data by establishing quiescent chamber air conditions prior to rotor operation and data acquisition. Additionally, a larger low-pressure wind tunnel is currently under construction, and will be placed alongside the MARSWIT in the PAL near-vacuum chamber. The new wind tunnel will have an 80-inch cross section, which will decrease tunnel effects when testing rotors approximately 4 feet in diameter. Further, to counteract PAL wind recirculation while chamber pressure is pumping down, additional flow treatment will be added at the wind tunnel inlet.

REFERENCES

[1] D. Brown, J. Wendel, and D. C. Agle: Mars Helicopter to Fly on NASA's Next Red Planet Rover Mission. Available: https://www.nasa.gov/press-release/mars-helicopter-to-fly-on-nasa-s-next-red-planet-rover-mission. Accessed: 13-Aug-2018.

[2] W. J. F. Koning, W. Johnson, and B. G. Allan: Generation of Mars Helicopter Rotor Model for Comprehensive Analyses, in *AHS Aeromechanics Design for Transformative Vertical Flight*, 2018.

[3] NASA - Planetary Aeolian Laboratory. Available: https://www.nasa.gov/centers/ames/business/planetary_aeolian_facilities.html. Accessed: 03-Aug-2017.

[4] PAL | The Ronald Greeley Center for Planetary Studies. Available: https://rpif.asu.edu/index.php/pal/. Accessed: 23-Nov-2017.

[5] M. McCoy, A. J. Wadcock, and L. A. Young: Documentation of the Recirculation in a Closed-Chamber Rotor Hover Test, NASA/TM–2016-219162, Aug. 2016.

[6] W. J. F. Koning: Generation of Performance Model for the Aeolian Wind Tunnel (AWT) Rotor at Reduced Pressure, NASA/CR–2018-219737, Jan. 2018.

[7] L. A. Young and E. W. Aiken: Engineering Studies into Vertical Lift Planetary Aerial Vehicles, in *AHS International Meeting on Advanced Rotorcraft Technology and Life Saving Activities*, 2002.

APPENDIX A—ISOLATED ROTOR HARDWARE TECHNICAL DRAWINGS

DRAWING NUMBER: A242 TESTSTAND DATAREPORT — SHEET — REV

NOTES: UNLESS OTHERWISE SPECIFIED

CAD PLATE PER QQ-P-L16 TYPE II, CLASS 2

RELEASED DRAWING

DATE: 7/29/16

REVISIONS

REV	DESCRIPTION	DATE	APPROVAL
B	PART 11 REVISION	8/4/16	GA

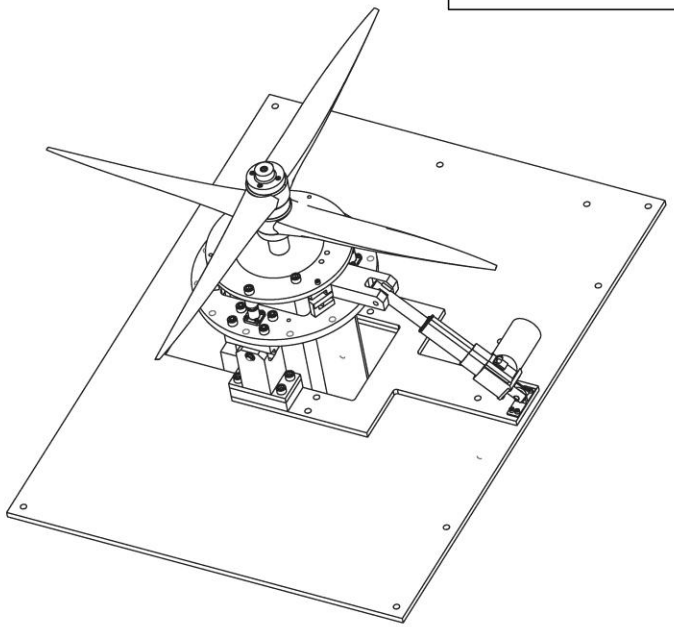

1 242 WIND TUNNEL STAND CONFIG #1 (0-DEG ANGLE)

PARTS LIST

QTY REQ'D PER ASSY -2	QTY REQ'D PER ASSY -1	CAGE CODE	PART OR IDENTIFYING NO.	DESCRIPTION/NOMENCLATURE	MATERIAL SPECIFICATION	SHEET ZONE	ITEM NO.
	23		MCMASTER CARR #91253A375	FLT HD SCREW 82° 0.500-20 UNF X 1.25" LONG	CUSTOMER SUPPLIED BLACK-OXIDE ALLOY STEEL		18
	8		MCMASTER CARR #90044A171	SHCS .500-20 UNF 2.5 LONG	CUSTOMER SUPPLIED BLACK-OXIDE ALLOY STEEL		17
	30		MCMASTER CARR #91251A014	SHCS .500-20 UNF 1.25 LONG	CUSTOMER SUPPLIED BLACK-OXIDE ALLOY STEEL		16
	12		MCMASTER CARR #91253A377	FLT HD SCREW 82° 0.500-20 UNF X 1.5" LONG	CUSTOMER SUPPLIED BLACK-OXIDE ALLOY STEEL		15
	1			MOTOR ASSEMBLY	CUSTOMER SUPPLIED		14
	1			HUB ASSEMBLY	CUSTOMER SUPPLIED		13
	1			LOADCELL SHEAR PIN	SS 15-5 PH 975		12
	1			ACTUATOR SUPPORT BLOCK	A-36 STEEL		11
	1			PA-03 PROGRESSIVE AUTOMATION ACTUATOR	CUSTOMER SUPPLIED		10
	1			ACTUATOR LUG	CUSTOMER SUPPLIED		9
	1			WIND TUNNEL BASE PLATE	A572-STEEL GRADE 50 FTU-65 KSI		8
	1			METRIC PLATE 2	SS 17-4 PH 900		7
	1			METRIC PLATE 1	CUSTOMER SUPPLIED SS 15-5 PH 975		6
	2			HINGESUPPORT LUG	SS 17-4 PH 900		5
	2			HINGESUPPORT CLEVIS	SS 15-5 PH 975		4
	2			HINGESUPPORT MIDPLATE	A-36 STEEL		3
	2			HINGESUPPORT BASE PLATE	A-36 STEEL		2
	X			242 WIND TUNNEL STAND CONFIG #1 0-DEG			1
	1		MCMASTER CARR #97245A697	CLEVIS PIN WITH COTTER PIN ∅ .375, 3 LONG, 2.75 USEABLE	CUSTOMER SUPPLIED ZINC-PLATED STEEL		25
	12		MCMASTER CARR #91251A016	SHCS .25-20 UNF 1.50 LONG	CUSTOMER SUPPLIED BLACK-OXIDE ALLOY STEEL		24
	4		MCMASTER CARR #91251A544	SHCS .25-20 UNF 1.25 LONG	CUSTOMER SUPPLIED BLACK-OXIDE ALLOY STEEL		23
	3			SENSORTRONICS S-BEAM LOAD CELL MODEL 60001 (50 LBS)	CUSTOMER SUPPLIED ALUMINUM		22
	12		MCMASTER CARR #91251A345	SHCS 10-32 THREAD .75 LONG	CUSTOMER SUPPLIED BLACK- OXIDE ALLOY STEEL		21
	3		MCMASTER CARR #5931K76	.500-IN PIN LINEAR BALL BEARING 1.25 LONG	CUSTOMER SUPPLIED SS 440C		20
	2		MCMASTER CARR #93890A192	GROOVED CLEVIS PIN ∅ .500 X 3.25 LONG	CUSTOMER SUPPLIED SS 18-8		19
	X			242 WIND TUNNEL STAND CONFIG #1 0-DEG			1

NO. | NEXT ASSEMBLY | APPLICATION

UNLESS OTHERWISE SPECIFIED ALL DIMENSIONS ARE IN INCHES. ALL DIMENSIONS AND TOLERANCES APPLY AFTER SURFACE TREATMENT.

TOLERANCE UNLESS OTHERWISE SPECIFIED: FRACTIONAL ± /; .X ± 0.1; .XX ± 0.01; .XXX ± 0.001; ANGULAR ± 0.5

DRILLED HOLE TOLERANCES: DIAMETER / TOLERANCE .000-.125 +.005-.001; .126-.500 +.010-.002; .501-1.000 +.015-.002; 1.001-2.000 +.030-.003; OVER 2.000 +.060-.005

DIAMETER ON SAME AXIS TOTAL RUN OUT .XXX

BREAK SHARP CORNERS .XX MAX

ALL MACHINED SURFACES TO BE XXX ✓

DONOTSCALEDRAWING

PRELIM. RELEASE	DATE	DRAWN G. AMENT	DATE 7/29/16	Ames Research Center, Moffett Field, California 94035-1000	
INITIAL RELEASE	DATE	CHECKED G. WILLINK	DATE 7/29/16	242 WIND TUNNEL STAND	
LATEST REVISION	DATE	DESIGNED G.AMENT H.CUMMINGS	DATE 7/29/16		
PROJECT MGR L. YOUNG	DATE	STRESS	DATE		
SUPERVISOR W. WARMBRODT	DATE	MATERIAL	DATE	SIZE D; CAGE CODE 25307; A242_TESTSTAND_DATAREPORT; REV A	
REQUESTOR	DATE	Q.A.	DATE	SCALE 0.111; INDEX DATE; SHEET; OF 13	

PRO/E DRAWING FILE NAME: 242_TESTSTAND_DATAREPORT — WC REV

MODEL NAME: 242_STAND_ANGLED_V1 — NASADRUDER 09/2007

FAB ESTIMATE: — LATEST REV: — INITIAL REL: — PRELIM REL: — MODEL REV: — MODEL TYPE: ASSEM

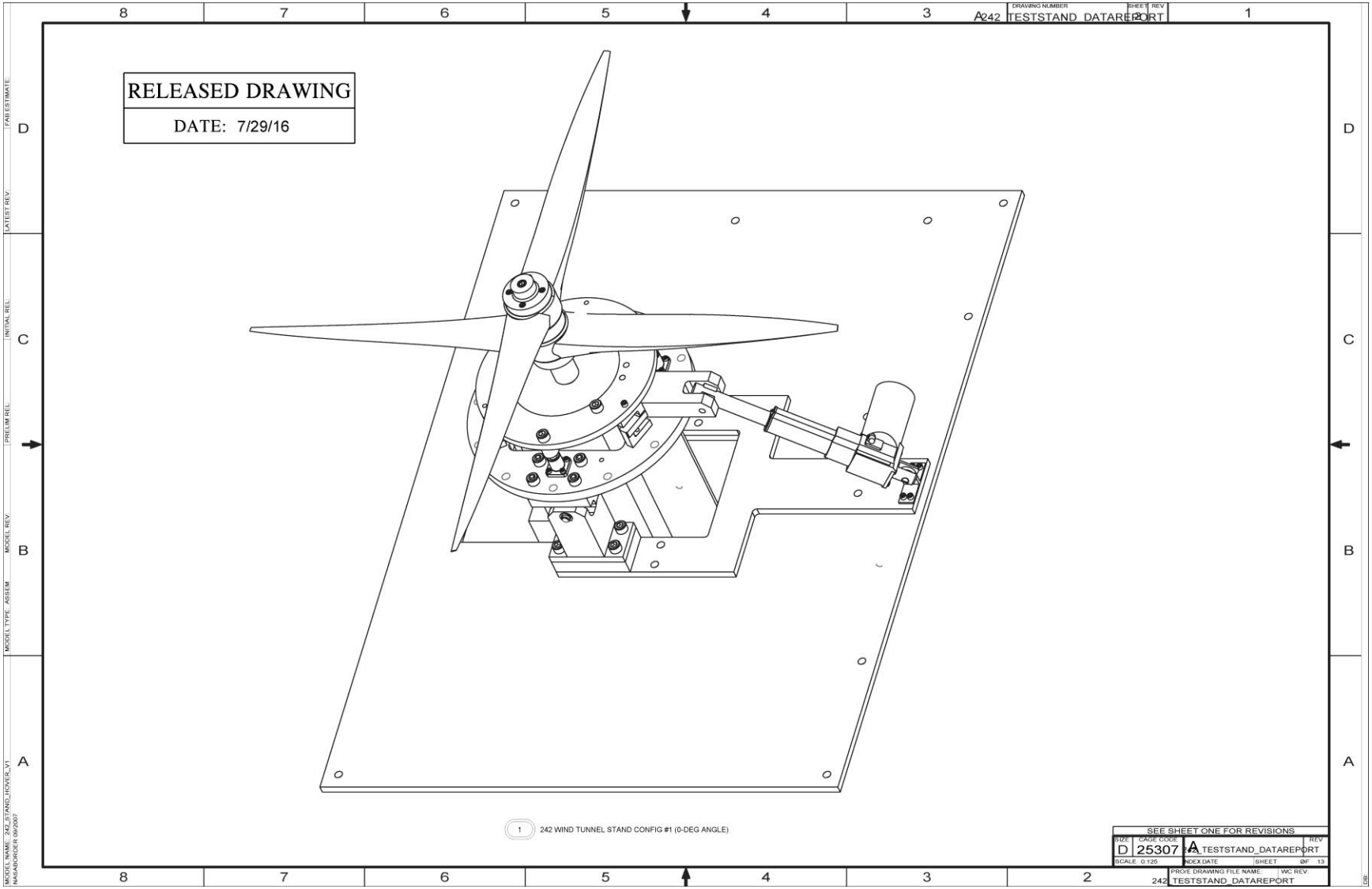
RELEASED DRAWING
DATE: 7/29/16
1 242 WIND TUNNEL STAND CONFIG #1 (0-DEG ANGLE)
SEE SHEET ONE FOR REVISIONS
D 25307 A
242_TESTSTAND_DATAREPORT
SCALE 0.125
INDEX DATE
SHEET 1 OF 13
PRO/E DRAWING FILE NAME:
WC REV:
242_TESTSTAND_DATAREPORT
DRAWING NUMBER
SHEET
REV
A242 TESTSTAND_DATAREPORT
MODEL NAME: 242_STAND_HOVER_V1
NASA/BOEIR 09/2007
MODEL TYPE: ASSEM
MODEL REV:
PRELIM REL:
INITIAL REL:
LATEST REV:
FAB ESTIMATE:

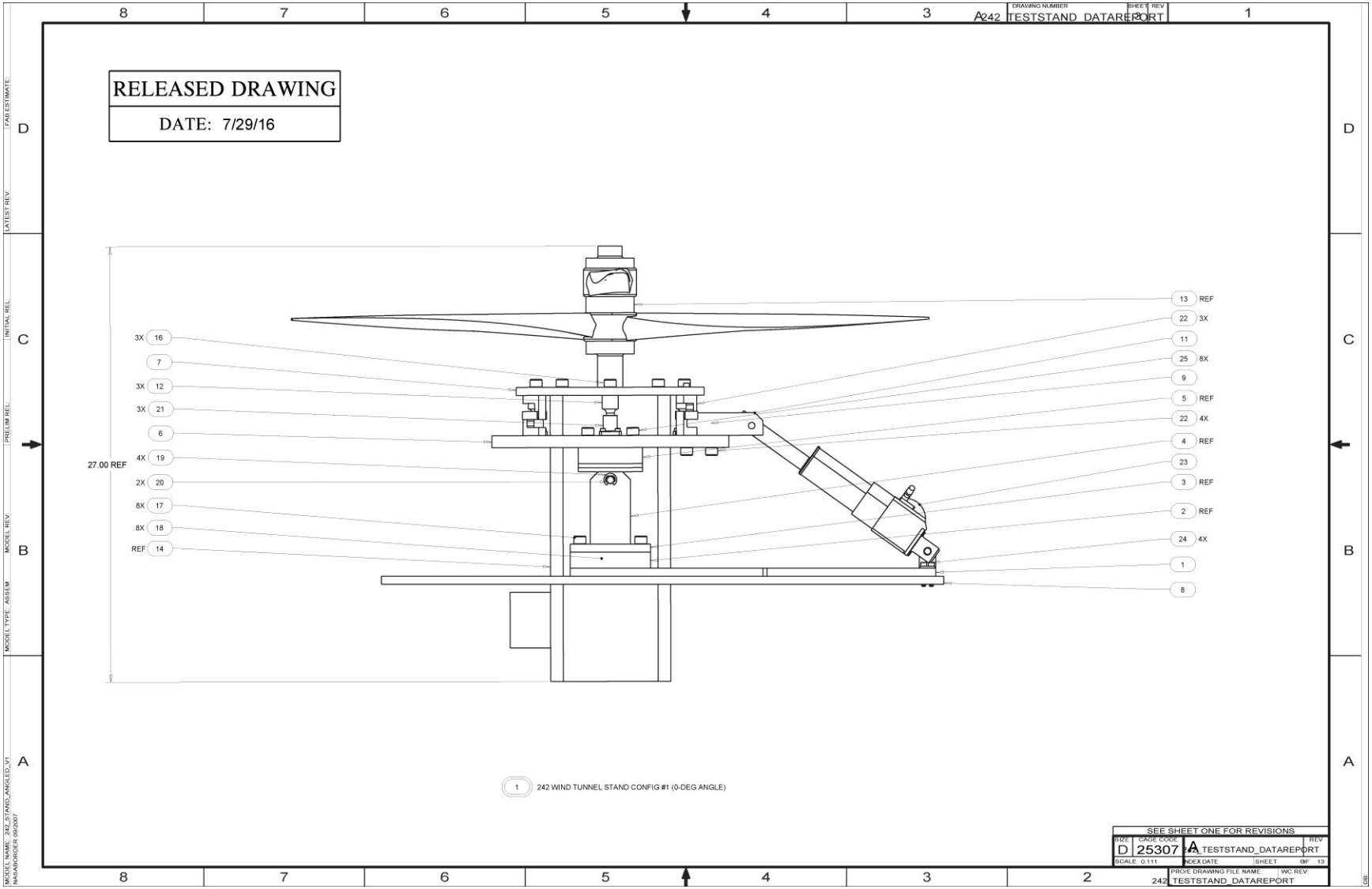
RELEASED DRAWING
DATE: 7/29/16
27.00 REF
3X 16
7
3X 12
3X 21
6
4X 19
2X 20
8X 17
8X 18
REF 14
13 REF
22 3X
11
25 8X
9
5 REF
22 4X
4 REF
23
3 REF
2 REF
24 4X
1
8
1 242 WIND TUNNEL STAND CONFIG #1 (0-DEG ANGLE)
SEE SHEET ONE FOR REVISIONS
D 25307 A TESTSTAND_DATAREPORT
242 TESTSTAND_DATAREPORT

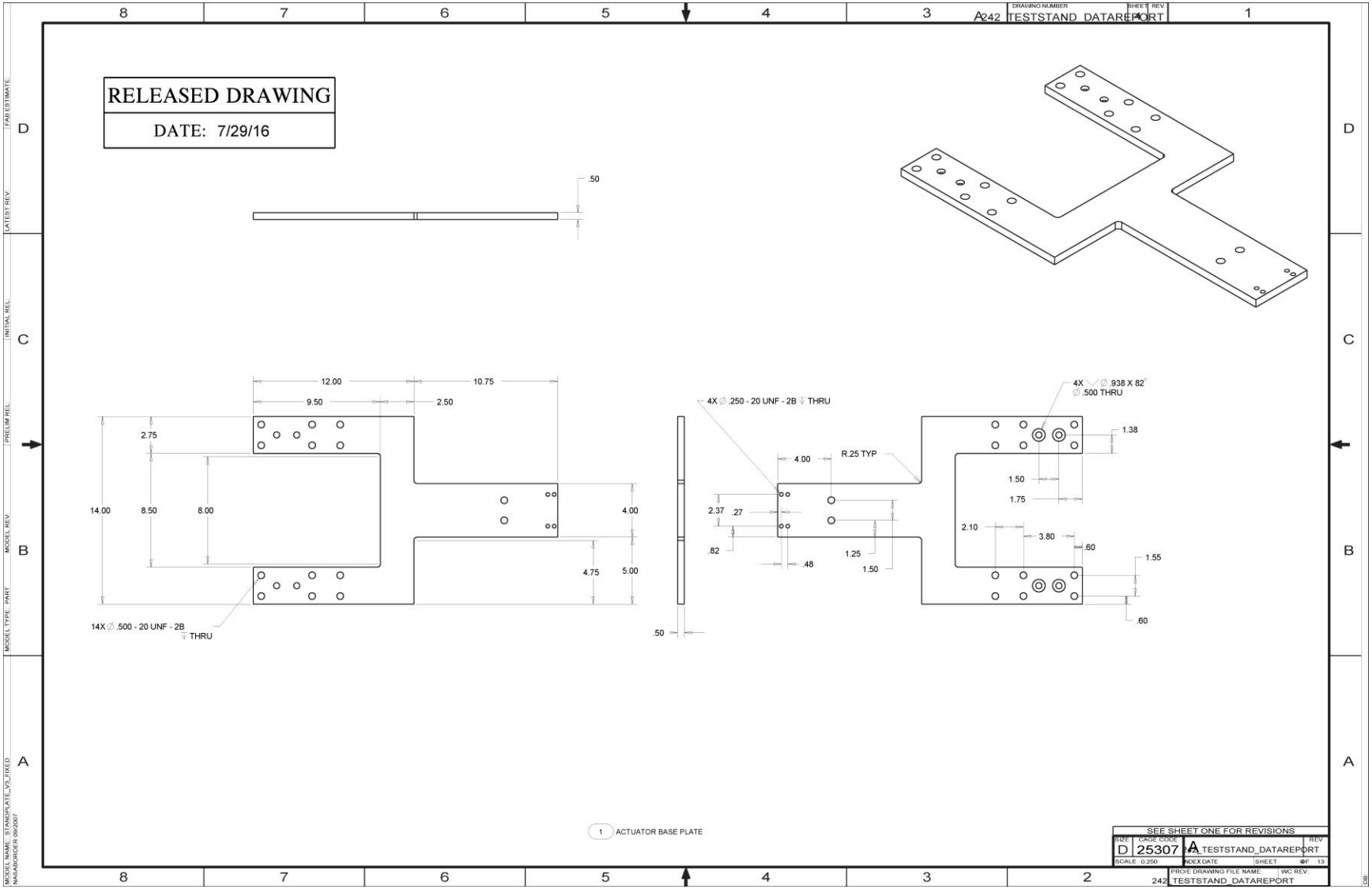
RELEASED DRAWING
DATE: 7/29/16
DRAWING NUMBER
TESTSTAND_DATAREPORT
SHEET
REV
A242
.50
12.00
10.75
9.50
2.50
2.75
14.00
8.50
8.00
4.00
4.75
5.00
14X ∅ .500 - 20 UNF - 2B ↧ THRU
4X ∅ .250 - 20 UNF - 2B ↧ THRU
4.00
R.25 TYP
2.37
.27
.82
.48
1.25
1.50
4X ∅ .938 X 82°
∅ .500 THRU
1.38
1.50
1.75
2.10
3.80
.60
1.55
.60
.50
1 ACTUATOR BASE PLATE
SEE SHEET ONE FOR REVISIONS
SIZE
CAGE CODE
D
25307
A
TESTSTAND_DATAREPORT
REV
SCALE 0.250
INDEX DATE
SHEET
OF 13
PRO/E DRAWING FILE NAME:
WC REV:
TESTSTAND_DATAREPORT
MODEL NAME: STANDPLATE_V3_FIXED
NASA/BOEING 09/2007
MODEL TYPE: PART
MODEL REV:
PRELIM REL:
INITIAL REL:
LATEST REV:
FAB ESTIMATE:

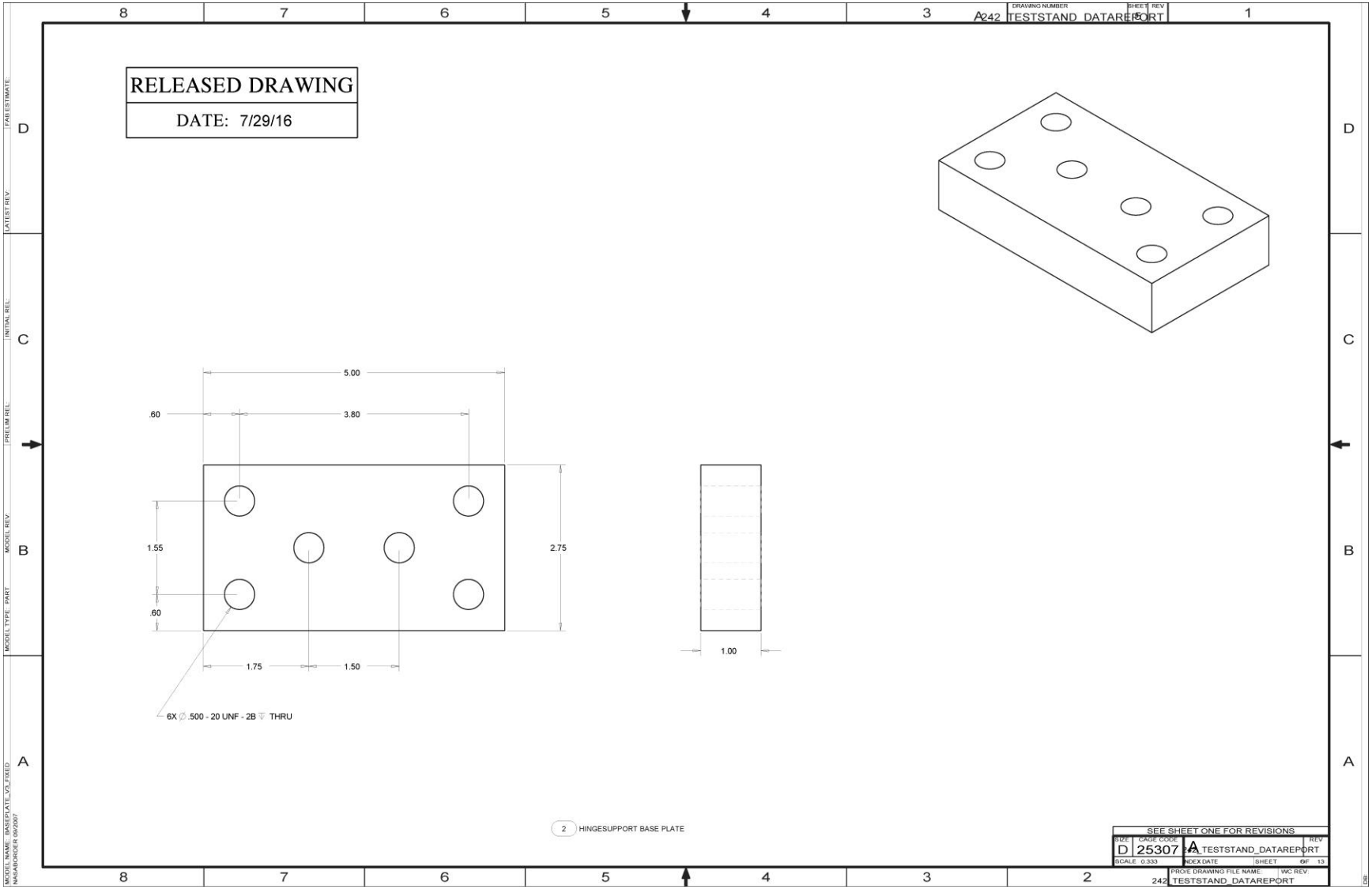
RELEASED DRAWING
DATE: 7/29/16
5.00
.60
3.80
1.55
.60
2.75
1.75
1.50
1.00
6X ∅.500 - 20 UNF - 2B ↧ THRU
2 HINGESUPPORT BASE PLATE
SEE SHEET ONE FOR REVISIONS
D
25307
A
TESTSTAND_DATAREPORT
SCALE 0.333
SHEET 6 OF 13
PRO/E DRAWING FILE NAME:
TESTSTAND_DATAREPORT
WC REV.
DRAWING NUMBER
TESTSTAND_DATAREPORT
SHEET
REV
MODEL NAME: BASEPLATE_V5_FIXED
NASA/BOEING 09/2007

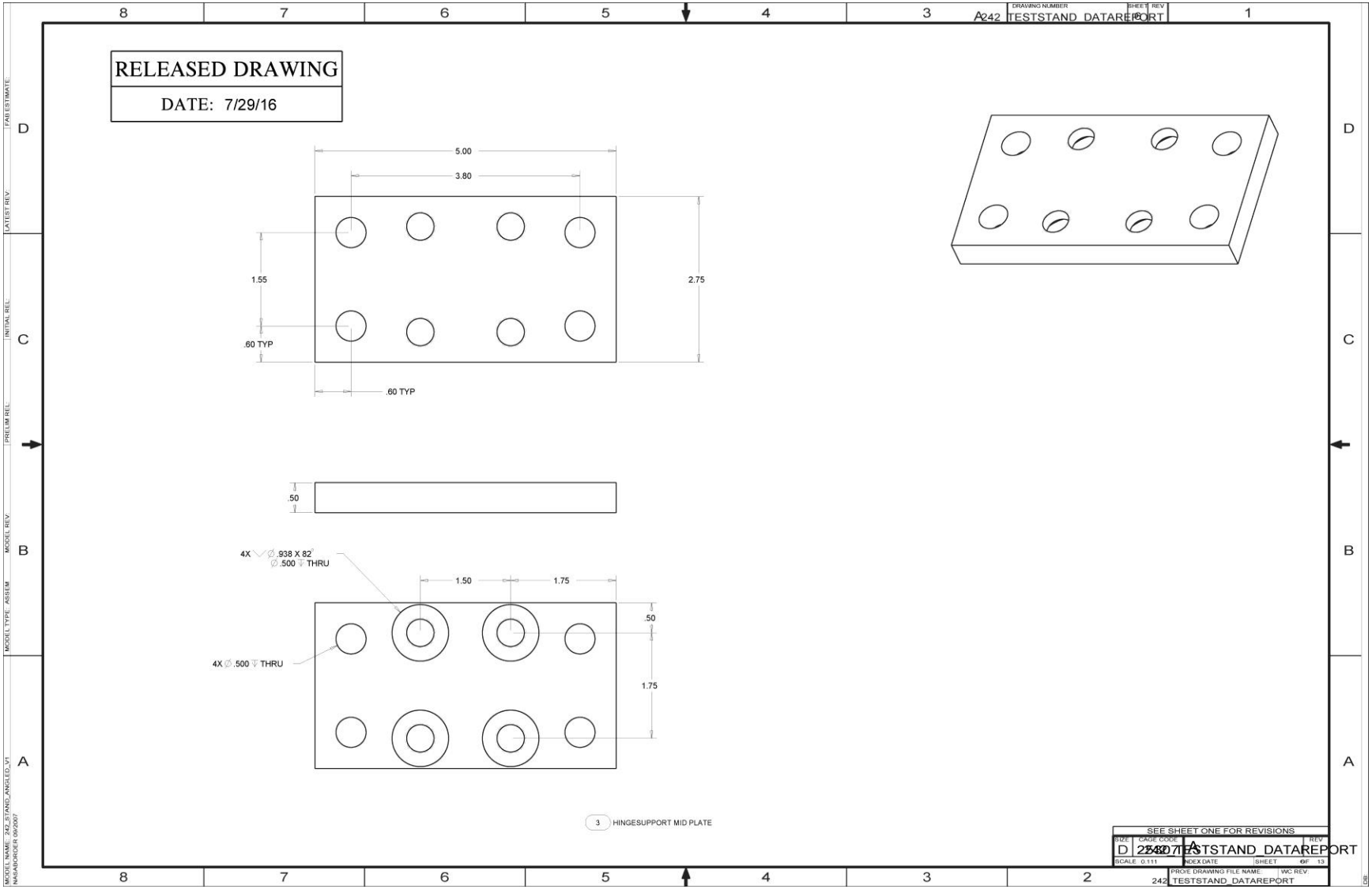
RELEASED DRAWING
DATE: 7/29/16
5.00
3.80
1.55
2.75
.60 TYP
.60 TYP
.50
4X ∅ .938 X 82°
∅ .500 ↧ THRU
1.50
1.75
.50
4X ∅ .500 ↧ THRU
1.75
3 HINGESUPPORT MID PLATE
SEE SHEET ONE FOR REVISIONS
D
A
TESTSTAND_DATAREPORT
242
TESTSTAND_DATAREPORT

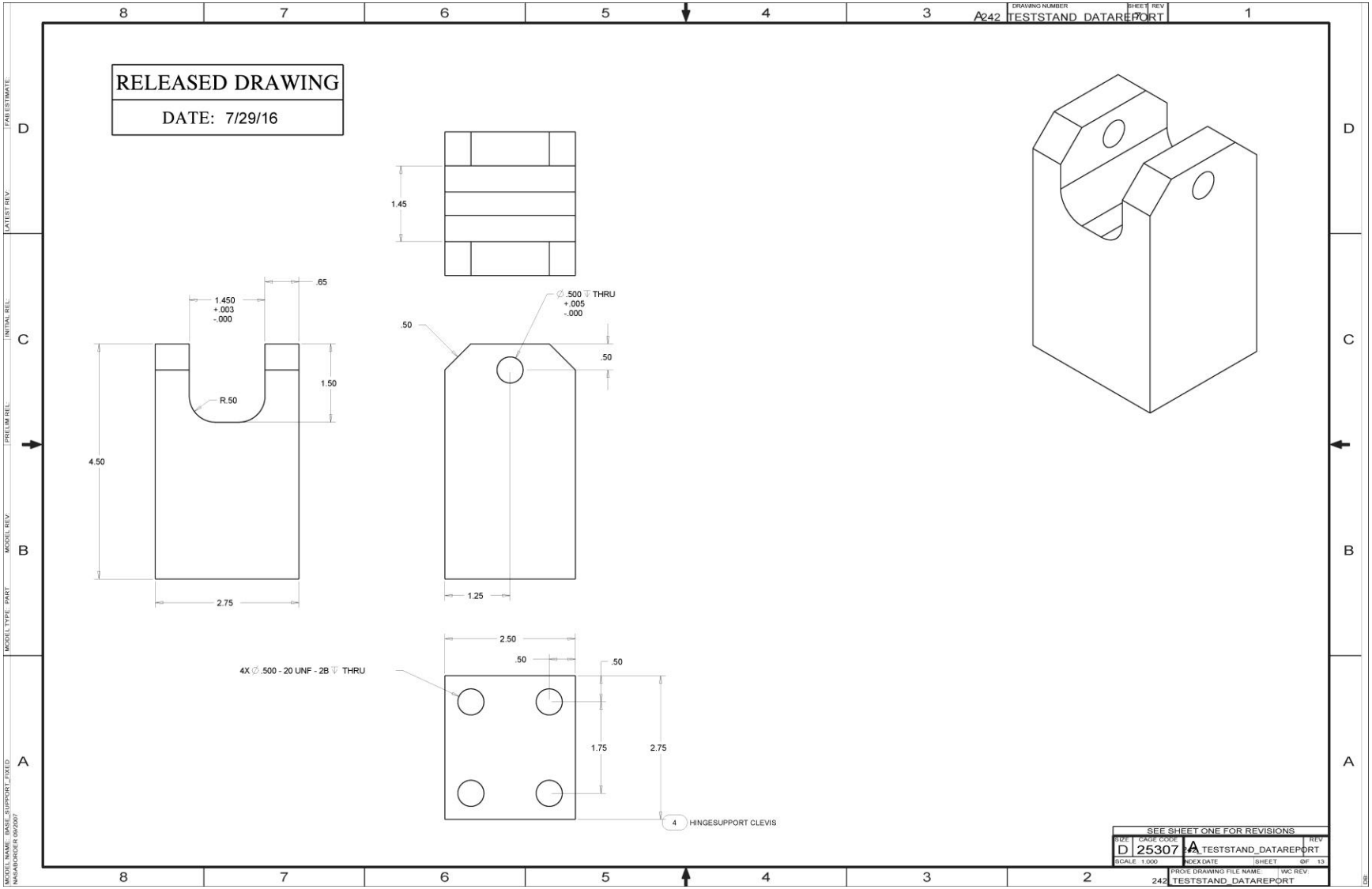
RELEASED DRAWING
DATE: 7/29/16
1.45
1.450
+.003
-.000
.65
R.50
1.50
4.50
2.75
∅.500 ↧ THRU
+.005
-.000
.50
.50
1.25
2.50
.50
.50
4X ∅.500 - 20 UNF - 2B ↧ THRU
1.75
2.75
4 HINGESUPPORT CLEVIS
SEE SHEET ONE FOR REVISIONS
SIZE D
CAGE CODE 25307
REV A
TESTSTAND_DATAREPORT
SCALE 1.000
INDEX DATE
SHEET ØF 13
PRO/E DRAWING FILE NAME:
WC REV:
TESTSTAND_DATAREPORT
DRAWING NUMBER
SHEET REV
TESTSTAND_DATAREPORT
MODEL NAME: BASE_SUPPORT_FIXED
MODEL TYPE: PART
MODEL REV:
PRELIM REL:
INITIAL REL:
LATEST REV:
FAB ESTIMATE:

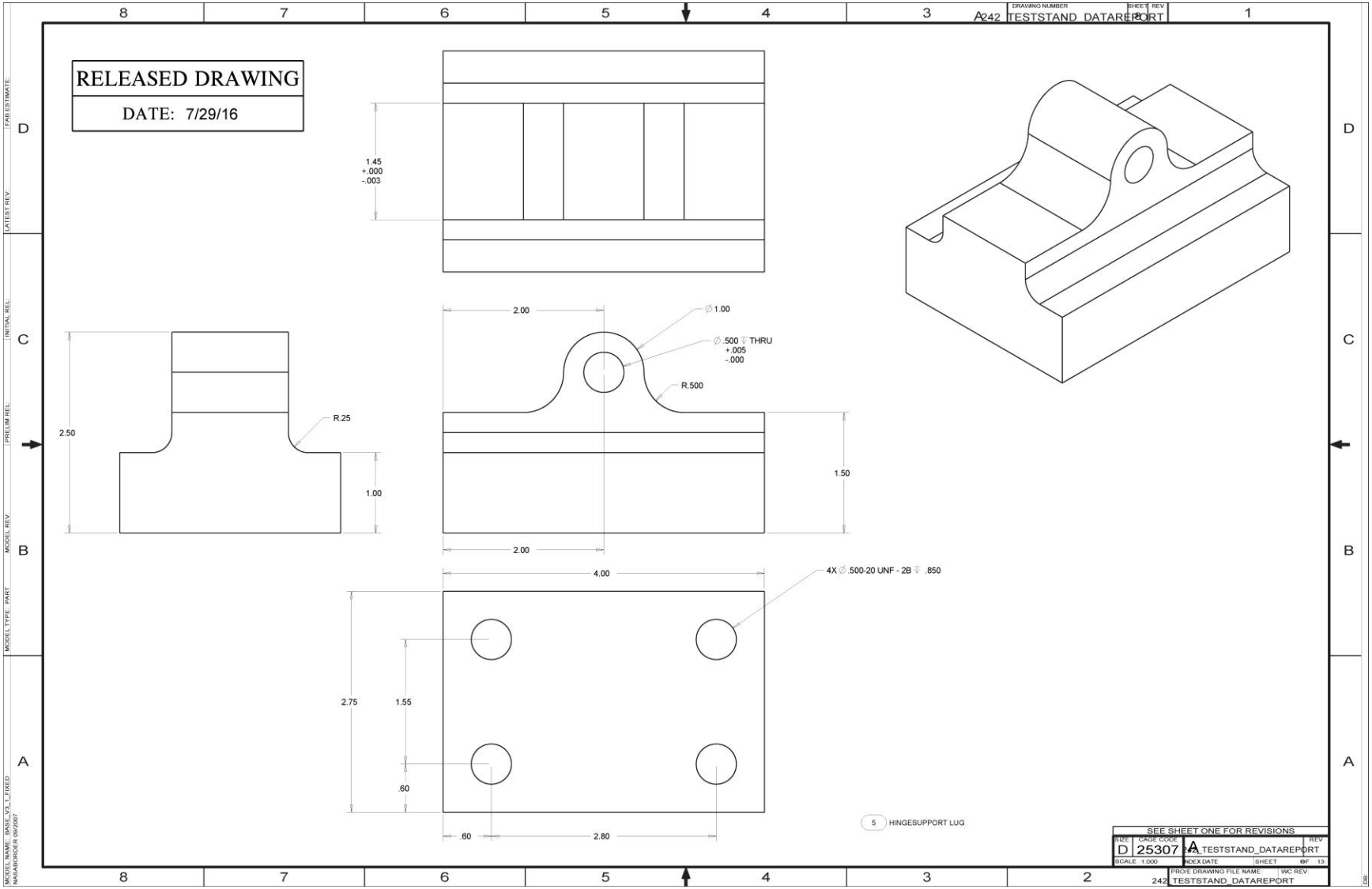
RELEASED DRAWING
DATE: 7/29/16
DRAWING NUMBER
TESTSTAND_DATAREPORT
SHEET
REV
1.45
+.000
-.003
2.00
∅ 1.00
∅ .500 ↧ THRU
+.005
-.000
R.500
R.25
2.50
1.00
1.50
2.00
4.00
4X ∅ .500-20 UNF - 2B ↧ .850
2.75
1.55
.60
.60
2.80
5 HINGESUPPORT LUG
SEE SHEET ONE FOR REVISIONS
SIZE
CAGE CODE
D
25307
A
TESTSTAND_DATAREPORT
REV
SCALE 1.000
INDEX DATE
SHEET
OF 13
PRO/E DRAWING FILE NAME:
WC REV:
TESTSTAND_DATAREPORT
MODEL NAME: BASE_V3_1_FIXED
NASA/BOEING 09/2007
MODEL TYPE: PART
MODEL REV:
PRELIM REL:
INITIAL REL:
LATEST REV:
FAB ESTIMATE:

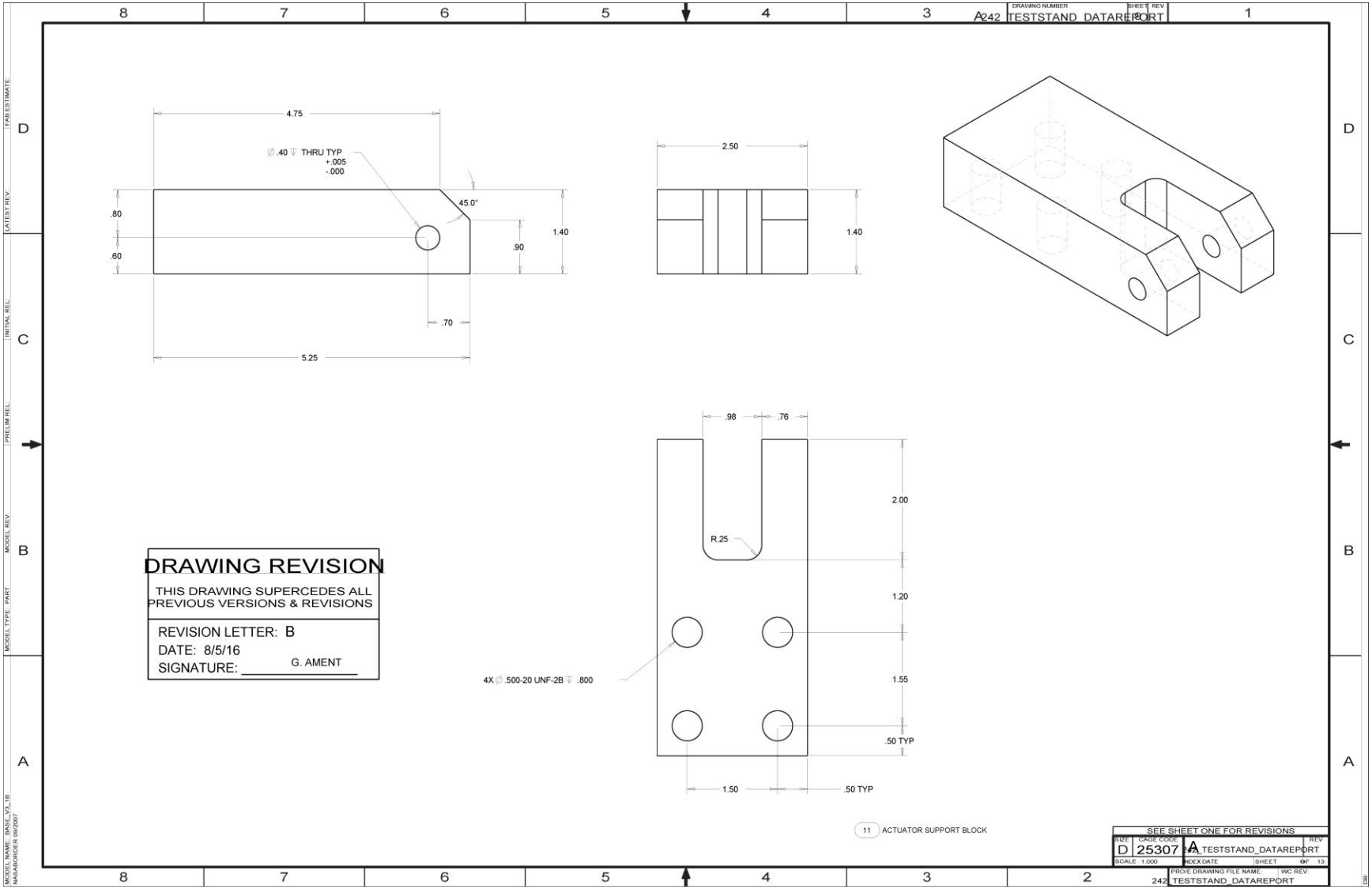
DRAWING NUMBER
TESTSTAND_DATAREPORT
SHEET
REV
A242
4.75
∅.40 ↧ THRU TYP
+.005
-.000
45.0°
.80
.60
.90
1.40
.70
5.25
2.50
1.40
.98
.76
2.00
R.25
1.20
1.55
.50 TYP
4X ∅.500-20 UNF-2B ↧ .800
1.50
.50 TYP
11 ACTUATOR SUPPORT BLOCK
DRAWING REVISION
THIS DRAWING SUPERCEDES ALL PREVIOUS VERSIONS & REVISIONS
REVISION LETTER: B
DATE: 8/5/16
SIGNATURE: G. AMENT
SEE SHEET ONE FOR REVISIONS
SIZE
CAGE CODE
D
25307
A
TESTSTAND_DATAREPORT
REV
SCALE 1.000
INDEX DATE
SHEET
OF 13
PRO/E DRAWING FILE NAME:
WC REV:
242
TESTSTAND_DATAREPORT
FAB ESTIMATE:
LATEST REV:
INITIAL REL:
PRELIM REL:
MODEL REV:
MODEL TYPE: PART
MODEL NAME: BASE_V3_1B
NASA/BOEING 09/2007

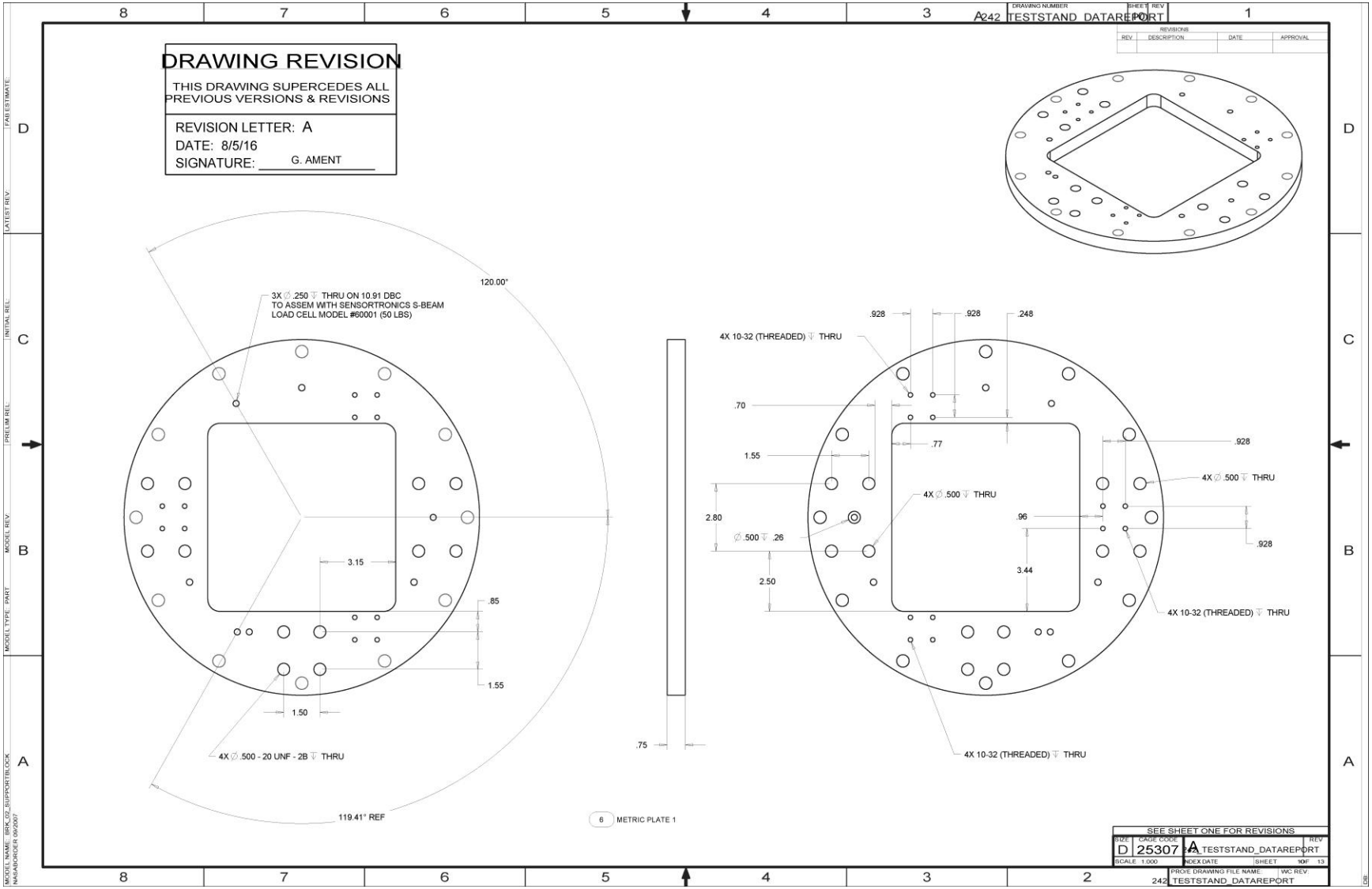
DRAWING REVISION
THIS DRAWING SUPERCEDES ALL PREVIOUS VERSIONS & REVISIONS
REVISION LETTER: A
DATE: 8/5/16
SIGNATURE: G. AMENT
3X ∅ .250 ↧ THRU ON 10.91 DBC TO ASSEM WITH SENSORTRONICS S-BEAM LOAD CELL MODEL #60001 (50 LBS)
120.00°
3.15
.85
1.55
1.50
4X ∅ .500 - 20 UNF - 2B ↧ THRU
119.41° REF
.75
4X 10-32 (THREADED) ↧ THRU
.928
.928
.248
.70
.77
1.55
.928
4X ∅ .500 ↧ THRU
2.80
.96
∅ .500 ↧ .26
.928
2.50
3.44
4X 10-32 (THREADED) ↧ THRU
4X 10-32 (THREADED) ↧ THRU
6 METRIC PLATE 1
SEE SHEET ONE FOR REVISIONS
D 25307 A TESTSTAND_DATAREPORT
SCALE 1.000
SHEET 1 OF 13
PRO/E DRAWING FILE NAME: TESTSTAND_DATAREPORT
WC REV:
DRAWING NUMBER TESTSTAND_DATAREPORT
REVISIONS
REV DESCRIPTION DATE APPROVAL
MODEL NAME: BRK_02_SUPPORTBLOCK
NASA/BOEING 09/2007

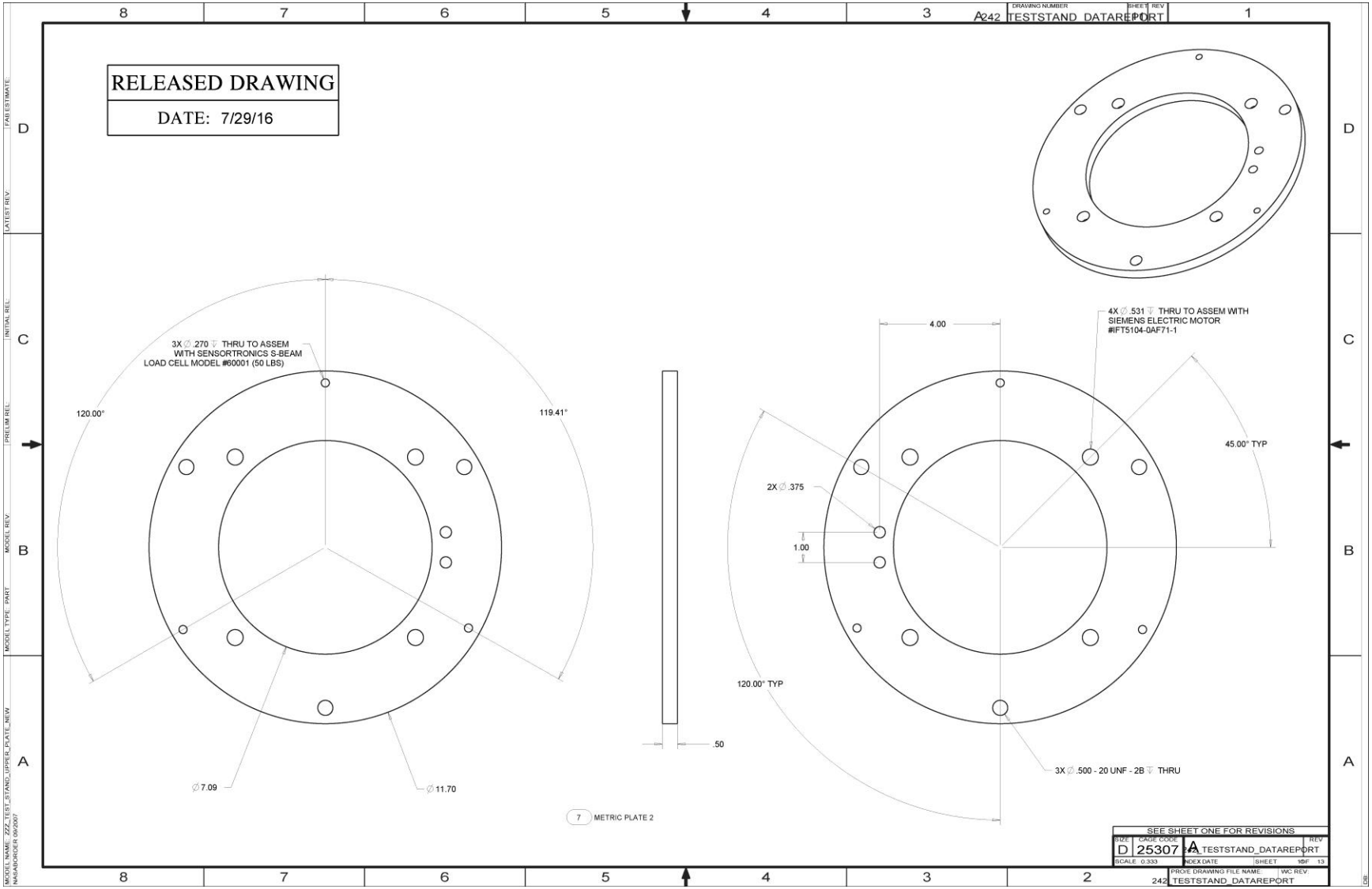
RELEASED DRAWING
DATE: 7/29/16
DRAWING NUMBER
TESTSTAND_DATAREPORT
3X ∅.270 ↧ THRU TO ASSEM
WITH SENSORTRONICS S-BEAM
LOAD CELL MODEL #60001 (50 LBS)
120.00°
119.41°
∅7.09
∅11.70
.50
4.00
4X ∅.531 ↧ THRU TO ASSEM WITH
SIEMENS ELECTRIC MOTOR
#IFT5104-0AF71-1
45.00° TYP
2X ∅.375
1.00
120.00° TYP
3X ∅.500 - 20 UNF - 2B ↧ THRU
7 METRIC PLATE 2
SEE SHEET ONE FOR REVISIONS
SIZE D
CAGE CODE 25307
REV A
TESTSTAND_DATAREPORT
SCALE 0.333
SHEET 1 OF 13
PRO/E DRAWING FILE NAME: TESTSTAND_DATAREPORT
WC REV:
MODEL NAME: ZZZ_TEST_STAND_UPPER_PLATE_NEW
NASA/BOEING 09/2007
MODEL TYPE: PART
MODEL REV:
PRELIM REL:
INITIAL REL:
LATEST REV:
FAB ESTIMATE:

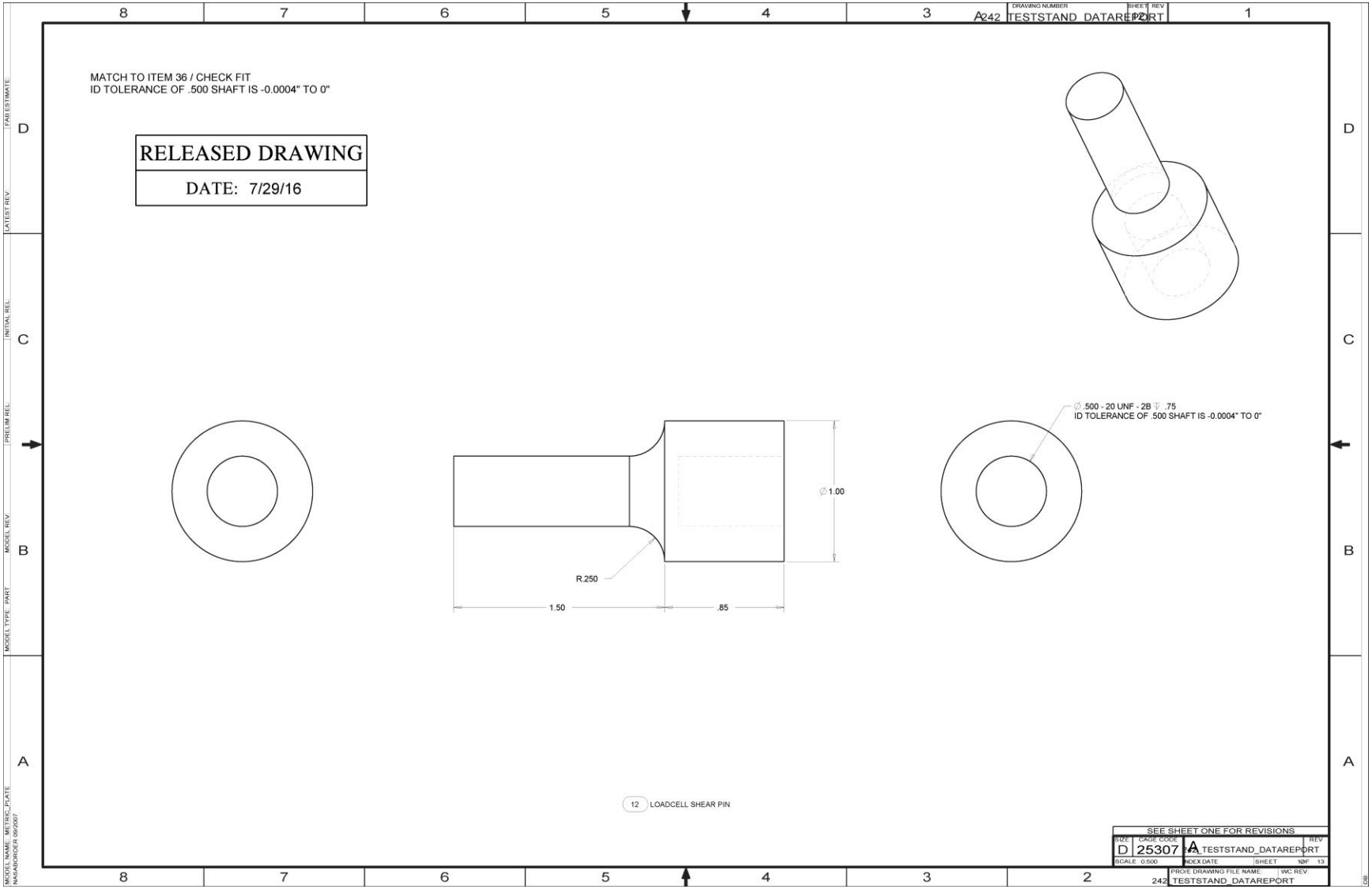
DRAWING NUMBER
TESTSTAND_DATAREPORT
SHEET
REV
A242
MATCH TO ITEM 36 / CHECK FIT
ID TOLERANCE OF .500 SHAFT IS -0.0004" TO 0"
RELEASED DRAWING
DATE: 7/29/16
∅ .500 - 20 UNF - 2B ↧ .75
ID TOLERANCE OF .500 SHAFT IS -0.0004" TO 0"
∅ 1.00
R.250
1.50
.85
12 LOADCELL SHEAR PIN
SEE SHEET ONE FOR REVISIONS
SIZE
CAGE CODE
D
25307
A
TESTSTAND_DATAREPORT
REV
SCALE 0.500
INDEX DATE
SHEET
1 OF 13
PRO/E DRAWING FILE NAME:
WC REV:
TESTSTAND_DATAREPORT
MODEL NAME: METRIC_PLATE
NASA/BOEING 09/2007
MODEL TYPE: PART
MODEL REV:
PRELIM REL:
INITIAL REL:
LATEST REV:
FAB ESTIMATE:

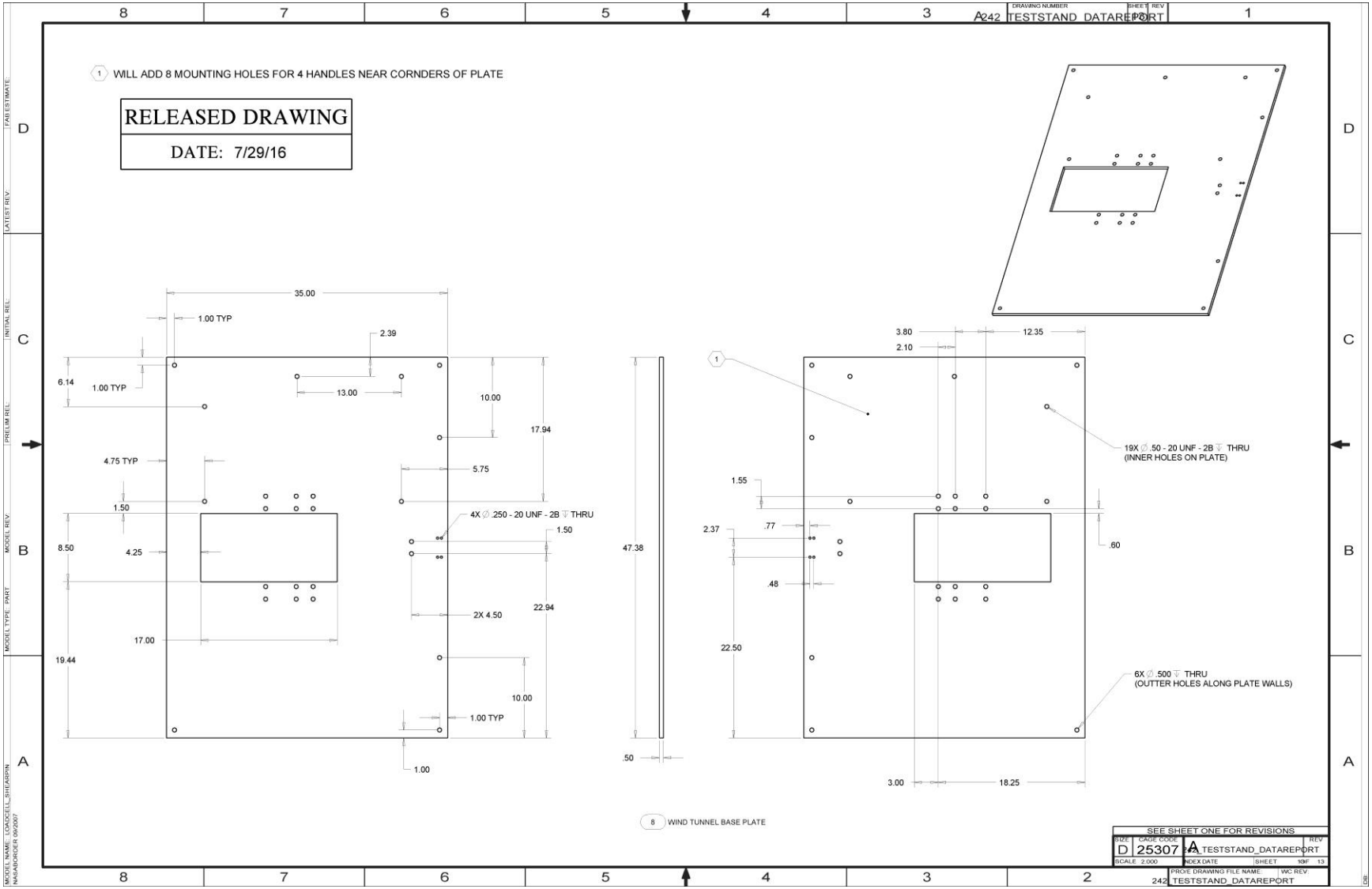
DRAWING NUMBER
TESTSTAND_DATAREPORT
SHEET
REV
1
A
1 WILL ADD 8 MOUNTING HOLES FOR 4 HANDLES NEAR CORNDERS OF PLATE
RELEASED DRAWING
DATE: 7/29/16
35.00
1.00 TYP
2.39
6.14
1.00 TYP
13.00
10.00
17.94
4.75 TYP
5.75
1.50
4X ∅ .250 - 20 UNF - 2B ↧ THRU
1.50
8.50
4.25
47.38
2X 4.50
22.94
17.00
19.44
10.00
1.00 TYP
1.00
.50
3.80
12.35
2.10
19X ∅ .50 - 20 UNF - 2B ↧ THRU
(INNER HOLES ON PLATE)
1.55
2.37
.77
.60
.48
22.50
6X ∅ .500 ↧ THRU
(OUTTER HOLES ALONG PLATE WALLS)
3.00
18.25
8 WIND TUNNEL BASE PLATE
SEE SHEET ONE FOR REVISIONS
SIZE
CAGE CODE
D
25307
A
TESTSTAND_DATAREPORT
REV
SCALE 2.000
INDEX DATE
SHEET
1 OF 13
PRO/E DRAWING FILE NAME:
WC REV:
TESTSTAND_DATAREPORT
MODEL NAME: LOADCELL_SHEARPIN
NASA/BOEIER 09/2007
TAB ESTIMATE:
LATEST REV:
INITIAL REL:
PRELIM REL:
MODEL REV:
MODEL TYPE: PART

APPENDIX B—CORRECTED DATA

run	point n [~]	p [mbar] rho [lb/ft3]	RPM [~] T [F]	T [lb] Q [ft-lb]	P [hp] Pi [hp]	Mx [in-lb] My [in-lb]	CT [~] CP [~]	CMx [~] CMy [~]	FM [~] Mtip [~]	Re.75 [~] nu [ft2/s]	V [ft/s] phi [deg]
1	1	1000	0	0	0	9.23					0.5
	2	7.56E-02	32	0	0	85.52					83.8
1	2	1000	100	0.03	-0.01	9.35					NA
	2	7.56E-02	32	-0.57	0	85.34					83.7
1	3	1000	200	0.39	-0.01	9.4					0.5
	2	7.56E-02	32	-0.38	0	85.03					83.7
1	4	1000	300	0.9	-0.01	9.63					1.3
	2	7.56E-02	32	-0.15	0	85.13					83.5
1	5	1000	400	2.14	0.01	9.07					2.1
	2	7.56E-02	32	0.14	0	85.2					83.9
1	6	1000	500	3.28	0.05	9.19					2.5
	2	7.56E-02	32	0.49	0	85.36					83.9
1	7	1000	604	4.83	0.1	9.19					3
	2	7.56E-02	32	0.88	0	85.65					83.9
1	8	1000	704	6.57	0.19	9.43					3.8
	2	7.56E-02	32	1.4	0	86.19					83.8
1	9	1000	802	8.55	0.3	9.32					4.1
	2	7.56E-02	32	1.98	0	86.26					83.8
1	10	1000	901	10.95	0.45	9.33					4.8
	2	7.56E-02	32	2.61	0	86.48					83.8
1	11	1000	1003	13.6	0.64	9.43					5.4
	2	7.56E-02	32	3.34	0	87.37					83.8
1	12	1000	1099	16.47	0.86	9.85					5.8
	2	7.56E-02	32	4.09	0	87.88					83.6
1	13	1000	1197	19.98	1.15	9.22					6.5
	2	7.56E-02	32	5.03	0	89.84					84.1
1	14	1000	1296	23.38	1.48	8.99					7.4

run	point n [~]	p [mbar] rho [lb/ft3]	RPM [~] T [F]	T [lb] Q [ft-lb]	P [hp] Pi [hp]	Mx [in-lb] My [in-lb]	CT [~] CP [~]	CMx [~] CMy [~]	FM [~] Mtip [~]	Re.75 [~] nu [ft2/s]	V [ft/s] phi [deg]
	2	7.56E-02	32	5.98	0	90.63					84.3
1	15	1000	0	0	0	9.99					NA
	2	7.56E-02	32	0	0	85.37					83.3
2	1	1000	0	0	0	9.99					NA
	2	7.56E-02	32	0	0	85.37					83.3
2	2	1000	100	0.05	-0.01	10.09					NA
	2	7.56E-02	32	-0.63	0	85.22					83.2
2	3	1000	200	0.39	-0.02	10.11					1.1
	2	7.56E-02	32	-0.45	0	85.24					83.2
2	4	1000	300	0.89	-0.01	10.12					2.7
	2	7.56E-02	32	-0.21	0	85.89					83.3
2	5	1000	400	2.21	0.01	9.2					3.7
	2	7.56E-02	32	0.08	0	86.73					83.9
2	6	1000	500	3.41	0.04	8.82					4.5
	2	7.56E-02	32	0.45	0	87.53					84.2
2	7	1000	603	5.05	0.1	8.25					5.5
	2	7.56E-02	32	0.88	0	88.42					84.7
2	8	1000	703	6.97	0.19	7.58					6.4
	2	7.56E-02	32	1.4	0	90.42					85.2
2	9	1000	803	9	0.31	7.23					7.4
	2	7.56E-02	32	2.02	0	91.94					85.5
2	10	1000	901	11.51	0.46	5.96					8.4
	2	7.56E-02	32	2.69	0	93.27					86.3
2	11	1000	1002	14.29	0.65	5.25					9.3
	2	7.56E-02	32	3.42	0	95.15					86.8
2	12	1000	1100	17.35	0.89	3.56					10.1

run	point n [~]	p [mbar] rho [lb/ft3]	RPM [~] T [F]	T [lb] Q [ft-lb]	P [hp] Pi [hp]	Mx [in-lb] My [in-lb]	CT [~] CP [~]	CMx [~] CMy [~]	FM [~] Mtip [~]	Re.75 [~] nu [ft2/s]	V [ft/s] phi [deg]
	2	7.56E-02	32	4.27	0	97.15					87.9
2	13	1000	1198	20.66	1.18	3.26					11.2
	2	7.56E-02	32	5.17	0	99.64					88.1
2	14	1000	1297	24.05	1.52	1.55					11.6
	2	7.56E-02	32	6.15	0	101.22					89.1
2	15	1000	1394	28.32	1.92	0.18					9.6
	2	1.38E-01	32	7.22	0	104.42					89.9
2	16	1014.7	0	0	0	0					NA
	2	7.56E-02	65.7	0	0	0			0		
3	1	1014.7	0	0	0	0					NA
	2	7.56E-02	65.7	0	0	0			0		
3	2	1014.7	1000	14.63	0.67	-5.16	2.28E-02	-4.00E-04	0.62		9.4
	2	7.56E-02	65.7	3.51	0.5	5.37	3.96E-03	4.17E-04	0.16		133.8
3	3	1014.7	1246	22.72	1.36	-7.31	2.29E-02	-3.66E-04	0.63		11.9
	2	7.56E-02	65.7	5.73	0.97	9.67	3.89E-03	4.84E-04	0.19		127.1
3	4	1014.7	1242	21.86	1.36	-5.14	2.22E-02	-2.59E-04	0.6		11
	2	7.56E-02	65.7	5.73	0.91	9.53	3.92E-03	4.80E-04	0.19		118.4
3	5	1014.7	1246	21.93	1.38	-6.75	2.21E-02	-3.38E-04	0.59		11.4
	2	7.56E-02	65.7	5.83	0.92	10.48	3.95E-03	5.25E-04	0.19		122.8
3	6	1014.7	1196	19.87	1.22	-5.27	2.17E-02	-2.86E-04	0.57		11.3
	2	7.56E-02	65.7	5.36	0.79	10.06	3.98E-03	5.46E-04	0.19		117.7
3	7	1014.7	1196	19.91	1.23	-5.26	2.18E-02	-2.86E-04	0.57		11.1
	2	7.56E-02	65.7	5.4	0.79	9.8	4.01E-03	5.32E-04	0.19		118.2
3	8	1014.7	1197	19.69	1.22	-4.51	2.15E-02	-2.45E-04	0.56		11.1
	2	7.56E-02	65.7	5.35	0.78	10.57	3.97E-03	5.73E-04	0.19		113.1
3	9	1014.7	1197	19.8	1.23	-5.2	2.16E-02	-2.82E-04	0.56		11.1

run	point	p [mbar]	RPM [~]	T [lb]	P [hp]	Mx [in-lb]	CT [~]	CMx [~]	FM [~]	Re.75 [~]	V [ft/s]
	n [~]	rho [lb/ft3]	T [F]	Q [ft-lb]	Pi [hp]	My [in-lb]	CP [~]	CMy [~]	Mtip [~]	nu [ft2/s]	phi [deg]
	2	7.56E-02	65.7	5.42	0.79	10.32	4.02E-03	5.60E-04	0.19		116.7
3	10	1014.7	1197	19.75	1.24	-4.58	2.16E-02	-2.49E-04	0.55		11.2
	2	7.56E-02	65.7	5.45	0.78	10.55	4.04E-03	5.73E-04	0.19		113.5
3	11	1014.7	1197	19.5	1.23	-5.11	2.13E-02	-2.77E-04	0.55		11.2
	2	7.56E-02	65.7	5.41	0.77	11.54	4.01E-03	6.26E-04	0.19		113.9
3	12	1014.7	1196	19.51	1.25	-5.35	2.13E-02	-2.91E-04	0.54		11.1
	2	7.56E-02	65.7	5.48	0.77	10.43	4.06E-03	5.66E-04	0.19		117.2
3	13	1014.7	1196	19.43	1.25	-4.67	2.12E-02	-2.54E-04	0.54		11.2
	2	7.56E-02	65.7	5.5	0.76	10.41	4.08E-03	5.66E-04	0.19		114.2
3	14	1014.7	0	0	0	0					NA
	2	7.56E-02	65.7	0	0	0			0		
4	1	1014.7	0	0	0	0					NA
	2	7.56E-02	65.7	0	0	0			0		
4	2	1014.7	1198	19.1	1.26	-5.16	2.08E-02	-2.79E-04	0.52		11.1
	2	7.56E-02	65.7	5.51	0.74	11.44	4.07E-03	6.19E-04	0.19		114.3
4	3	1014.7	1198	18.92	1.25	-4.34	2.06E-02	-2.35E-04	0.52		10.9
	2	7.56E-02	65.7	5.5	0.73	10.85	4.06E-03	5.87E-04	0.19		111.8
4	4	1014.7	1198	19.29	1.26	-4.44	2.10E-02	-2.40E-04	0.53		10.8
	2	7.56E-02	65.7	5.54	0.76	10.28	4.09E-03	5.57E-04	0.19		113.4
4	5	1014.7	1198	19.08	1.26	-3.47	2.08E-02	-1.88E-04	0.52		11
	2	7.56E-02	65.7	5.5	0.74	10.61	4.06E-03	5.75E-04	0.19		108.1
4	6	1014.7	1198	19.12	1.25	-3.04	2.08E-02	-1.65E-04	0.52		10.8
	2	7.56E-02	65.7	5.5	0.75	10.55	4.06E-03	5.71E-04	0.19		106.1
4	7	1014.7	1198	18.96	1.25	-3.43	2.07E-02	-1.86E-04	0.52		10.8
	2	7.56E-02	65.7	5.5	0.74	10.14	4.06E-03	5.49E-04	0.19		108.7
4	8	1014.7	1198	19.22	1.26	-3.7	2.10E-02	-2.01E-04	0.53		10.9

run	point n [~]	p [mbar] rho [lb/ft3]	RPM [~] T [F]	T [lb] Q [ft-lb]	P [hp] Pi [hp]	Mx [in-lb] My [in-lb]	CT [~] CP [~]	CMx [~] CMy [~]	FM [~] Mtip [~]	Re.75 [~] nu [ft2/s]	V [ft/s] phi [deg]
	2	7.56E-02	65.7	5.51	0.75	11.1	4.07E-03	6.02E-04	0.19		108.5
4	9	1014.7	1198	19.05	1.25	-4.07	2.08E-02	-2.20E-04	0.52		10.7
	2	7.56E-02	65.7	5.5	0.74	10.44	4.06E-03	5.65E-04	0.19		111.3
4	10	1014.7	0	0	0	0					NA
	2	7.56E-02	65.7	0	0	0			0		
5	1	1014.7	0	0	0	0					NA
	2	7.56E-02	65.7	0	0	0			0		
5	2	1014.7	1196	19.18	1.25	-4.56	2.10E-02	-2.47E-04	0.53		11
	2	7.56E-02	65.7	5.51	0.75	10.65	4.08E-03	5.78E-04	0.19		113.2
5	3	1014.7	1196	18.81	1.24	-3.29	2.06E-02	-1.79E-04	0.52		10.9
	2	7.56E-02	65.7	5.45	0.73	10.85	4.04E-03	5.89E-04	0.19		106.9
5	4	1014.7	1196	19.22	1.26	-4.53	2.10E-02	-2.46E-04	0.53		11.1
	2	7.56E-02	65.7	5.53	0.75	11.21	4.09E-03	6.08E-04	0.19		112
5	5	1014.7	1196	18.97	1.25	-3.72	2.07E-02	-2.02E-04	0.52		11.1
	2	7.56E-02	65.7	5.47	0.74	11.57	4.05E-03	6.28E-04	0.19		107.8
5	6	1014.7	1197	18.8	1.24	-2.9	2.05E-02	-1.58E-04	0.52		10.9
	2	7.56E-02	65.7	5.44	0.73	11.09	4.03E-03	6.02E-04	0.19		104.7
5	7	1014.7	1197	19.12	1.26	-3.96	2.09E-02	-2.15E-04	0.52		11
	2	7.56E-02	65.7	5.51	0.75	10.74	4.08E-03	5.83E-04	0.19		110.2
5	8	1014.7	1196	19.31	1.26	-4.5	2.11E-02	-2.44E-04	0.53		10.9
	2	7.56E-02	65.7	5.54	0.76	11.25	4.10E-03	6.11E-04	0.19		111.8
5	9	1014.7	1196	18.96	1.25	-3.69	2.07E-02	-2.00E-04	0.52		10.8
	2	7.56E-02	65.7	5.47	0.74	10.66	4.05E-03	5.79E-04	0.19		109.1
5	10	1014.7	1196	18.94	1.24	-3.38	2.07E-02	-1.84E-04	0.52		10.8
	2	7.56E-02	65.7	5.46	0.74	11.31	4.05E-03	6.14E-04	0.19		106.7
5	11	1014.7	1196	18.77	1.25	-3.23	2.05E-02	-1.75E-04	0.51		10.9

run	point n [~]	p [mbar] rho [lb/ft3]	RPM [~] T [F]	T [lb] Q [ft-lb]	P [hp] Pi [hp]	Mx [in-lb] My [in-lb]	CT [~] CP [~]	CMx [~] CMy [~]	FM [~] Mtip [~]	Re.75 [~] nu [ft2/s]	V [ft/s] phi [deg]
	2	7.56E-02	65.7	5.47	0.73	11.16	4.06E-03	6.06E-04	0.19		106.1
5	12	1014.7	1196	18.99	1.25	-2.93	2.07E-02	-1.59E-04	0.52		10.6
	2	7.56E-02	65.7	5.47	0.74	11.14	4.05E-03	6.05E-04	0.19		104.7
5	13	1014.7	0	0	0	0					NA
	2	7.56E-02	65.7	0	0	0			0		
6	1	1014.7	0	0	0	0					NA
	2	7.56E-02	65.7	0	0	0			0		
6	2	1014.7	1197	19.05	1.25	-3.61	2.08E-02	-1.96E-04	0.52		11
	2	7.56E-02	65.7	5.5	0.74	10.43	4.06E-03	5.66E-04	0.19		109.1
6	3	1014.7	1197	19	1.25	-3.47	2.07E-02	-1.88E-04	0.52		11
	2	7.56E-02	65.7	5.5	0.74	10.61	4.07E-03	5.76E-04	0.19		108.1
6	4	1014.7	1197	18.85	1.25	-4.03	2.06E-02	-2.19E-04	0.51		11.1
	2	7.56E-02	65.7	5.48	0.73	10.78	4.06E-03	5.85E-04	0.19		110.5
6	5	1014.7	1197	18.95	1.26	-4.37	2.07E-02	-2.37E-04	0.52		10.9
	2	7.56E-02	65.7	5.51	0.74	10.58	4.08E-03	5.74E-04	0.19		112.5
6	6	1014.7	1197	19.04	1.25	-4.32	2.08E-02	-2.34E-04	0.52		10.9
	2	7.56E-02	65.7	5.51	0.74	10.7	4.07E-03	5.81E-04	0.19		112
6	7	1014.7	1197	18.87	1.25	-4.49	2.06E-02	-2.44E-04	0.51		11.1
	2	7.56E-02	65.7	5.51	0.73	11.04	4.07E-03	5.99E-04	0.19		112.1
6	8	1014.7	1197	19	1.25	-2.97	2.07E-02	-1.61E-04	0.52		10.6
	2	7.56E-02	65.7	5.48	0.74	10.81	4.05E-03	5.86E-04	0.19		105.4
6	9	1014.7	0	0	0	0					NA
	2	7.56E-02	65.7	0	0	0			0		
7	1	1014.7	0	0	0	0					NA
	2	7.56E-02	65.7	0	0	0			0		

run	point	p [mbar]	RPM [~]	T [lb]	P [hp]	Mx [in-lb]	CT [~]	CMx [~]	FM [~]	Re.75 [~]	V [ft/s]
	n [~]	rho [lb/ft3]	T [F]	Q [ft-lb]	Pi [hp]	My [in-lb]	CP [~]	CMy [~]	Mtip [~]	nu [ft2/s]	phi [deg]
7	2	1014.7	1198	18.83	1.25	-3.3	2.05E-02	-1.79E-04	0.51		10.3
	2	7.56E-02	65.7	5.47	0.73	11.1	4.05E-03	6.02E-04	0.19		106.5
7	3	1014.7	1198	18.99	1.26	-3.57	2.07E-02	-1.94E-04	0.52		10.7
	2	7.56E-02	65.7	5.51	0.74	11.04	4.07E-03	5.98E-04	0.19		107.9
7	4	1014.7	1198	18.73	1.25	-3.19	2.04E-02	-1.73E-04	0.51		11
	2	7.56E-02	65.7	5.46	0.72	11.41	4.04E-03	6.18E-04	0.19		105.6
7	5	1014.7	1198	18.7	1.25	-2.76	2.04E-02	-1.50E-04	0.51		11
	2	7.56E-02	65.7	5.49	0.72	11.81	4.05E-03	6.40E-04	0.19		103.2
7	6	1014.7	1198	18.54	1.25	-2.81	2.02E-02	-1.52E-04	0.5		10.4
	2	7.56E-02	65.7	5.48	0.71	11.33	4.05E-03	6.14E-04	0.19		103.9
7	7	1014.7	1198	18.53	1.25	-2.19	2.02E-02	-1.19E-04	0.5		10.7
	2	7.56E-02	65.7	5.47	0.71	11.99	4.04E-03	6.50E-04	0.19		100.4
7	8	1014.7	1198	18.52	1.25	-3.05	2.02E-02	-1.65E-04	0.5		10.8
	2	7.56E-02	65.7	5.5	0.71	11.54	4.06E-03	6.25E-04	0.19		104.8
7	9	1014.7	1198	18.67	1.25	-2.65	2.03E-02	-1.44E-04	0.51		10.9
	2	7.56E-02	65.7	5.48	0.72	12.64	4.05E-03	6.85E-04	0.19		101.8
7	10	1014.7	1198	18.64	1.25	-3.06	2.03E-02	-1.66E-04	0.5		10.8
	2	7.56E-02	65.7	5.5	0.72	12	4.06E-03	6.50E-04	0.19		104.3
7	11	1014.7	1197	18.54	1.25	-3.08	2.02E-02	-1.67E-04	0.5		11.1
	2	7.56E-02	65.7	5.5	0.71	11.95	4.07E-03	6.48E-04	0.19		104.5
7	12	1014.7	1198	18.36	1.25	-2.05	2.00E-02	-1.11E-04	0.49		11
	2	7.56E-02	65.7	5.48	0.7	12.97	4.05E-03	7.03E-04	0.19		99
7	13	1014.7	1198	18.25	1.25	-2.63	1.99E-02	-1.42E-04	0.49		10.8
	2	7.56E-02	65.7	5.46	0.7	12.99	4.04E-03	7.04E-04	0.19		101.4
7	14	1014.7	1198	18.38	1.26	-2.92	2.00E-02	-1.58E-04	0.49		11
	2	7.56E-02	65.7	5.51	0.7	12.61	4.07E-03	6.83E-04	0.19		103
7	15	1014.7	0	0	0	0					NA

run	point n [~]	p [mbar] rho [lb/ft3]	RPM [~] T [F]	T [lb] Q [ft-lb]	P [hp] Pi [hp]	Mx [in-lb] My [in-lb]	CT [~] CP [~]	CMx [~] CMy [~]	FM [~] Mtip [~]	Re.75 [~] nu [ft2/s]	V [ft/s] phi [deg]
	2	7.56E-02	65.7	0	0	0			0		
8	1	1014.7	0	0	0	0					NA
	2	7.56E-02	65.7	0	0	0			0		
8	2	1014.7	1197	18.38	1.25	-3.61	2.00E-02	-1.96E-04	0.49		10.9
	2	7.56E-02	65.7	5.49	0.7	13.23	4.06E-03	7.17E-04	0.19		105.3
8	3	1014.7	1197	18.57	1.26	-3.4	2.02E-02	-1.84E-04	0.5		11.2
	2	7.56E-02	65.7	5.51	0.71	12.78	4.07E-03	6.93E-04	0.19		104.9
8	4	1014.7	1197	18.6	1.26	-3.55	2.03E-02	-1.93E-04	0.5		11.1
	2	7.56E-02	65.7	5.52	0.72	12.58	4.08E-03	6.82E-04	0.19		105.8
8	5	1014.7	1197	18.4	1.25	-2.45	2.01E-02	-1.33E-04	0.5		10.8
	2	7.56E-02	65.7	5.48	0.7	12.47	4.05E-03	6.76E-04	0.19		101.1
8	6	1014.7	1198	18.69	1.25	-3.11	2.04E-02	-1.68E-04	0.51		11
	2	7.56E-02	65.7	5.5	0.72	12.04	4.06E-03	6.52E-04	0.19		104.5
8	7	1014.7	1197	18.73	1.25	-3.32	2.04E-02	-1.80E-04	0.51		11
	2	7.56E-02	65.7	5.5	0.72	11.63	4.07E-03	6.30E-04	0.19		105.9
8	8	1014.7	1198	18.64	1.25	-3.75	2.03E-02	-2.03E-04	0.5		11
	2	7.56E-02	65.7	5.49	0.72	12.23	4.06E-03	6.63E-04	0.19		107.1
8	9	1014.7	1197	18.74	1.26	-4.44	2.04E-02	-2.40E-04	0.51		11.1
	2	7.56E-02	65.7	5.52	0.72	12.35	4.08E-03	6.69E-04	0.19		109.8
8	10	1014.7	1197	18.7	1.25	-3.18	2.04E-02	-1.73E-04	0.51		11
	2	7.56E-02	65.7	5.48	0.72	12.45	4.05E-03	6.75E-04	0.19		104.3
8	11	1014.7	1198	18.78	1.25	-3.85	2.05E-02	-2.09E-04	0.51		10.8
	2	7.56E-02	65.7	5.5	0.73	11.67	4.06E-03	6.32E-04	0.19		108.3
8	12	1014.7	1197	18.83	1.26	-3.63	2.05E-02	-1.97E-04	0.51		10.8
	2	7.56E-02	65.7	5.51	0.73	12.24	4.07E-03	6.64E-04	0.19		106.5
8	13	1014.7	1198	18.85	1.25	-3.81	2.05E-02	-2.06E-04	0.51		10.9

run	point	p [mbar]	RPM [~]	T [lb]	P [hp]	Mx [in-lb]	CT [~]	CMx [~]	FM [~]	Re.75 [~]	V [ft/s]
	n [~]	rho [lb/ft3]	T [F]	Q [ft-lb]	Pi [hp]	My [in-lb]	CP [~]	CMy [~]	Mtip [~]	nu [ft2/s]	phi [deg]
	2	7.56E-02	65.7	5.48	0.73	11.61	4.05E-03	6.29E-04	0.19		108.2
8	14	1014.7	1198	18.97	1.25	-3.83	2.07E-02	-2.08E-04	0.52		11
	2	7.56E-02	65.7	5.5	0.74	11.95	4.06E-03	6.47E-04	0.19		107.8
8	15	1014.7	0	0	0	0					NA
	2	7.56E-02	65.7	0	0	0			0		
9	1	1014.7	0	0	0	0					NA
	2	7.56E-02	65.7	0	0	0			0		
9	2	1014.7	1197	18.89	1.25	-4.47	2.06E-02	-2.42E-04	0.52		11
	2	7.56E-02	65.7	5.47	0.73	12.2	4.05E-03	6.62E-04	0.19		110.1
9	3	1014.7	1197	18.95	1.25	-4.36	2.07E-02	-2.37E-04	0.52		10.9
	2	7.56E-02	65.7	5.47	0.74	12.21	4.05E-03	6.63E-04	0.19		109.7
9	4	1014.7	1197	19.02	1.25	-4.17	2.08E-02	-2.26E-04	0.52		10.9
	2	7.56E-02	65.7	5.48	0.74	11.62	4.06E-03	6.31E-04	0.19		109.7
9	5	1014.7	1197	18.82	1.24	-3.89	2.05E-02	-2.11E-04	0.51		11
	2	7.56E-02	65.7	5.46	0.73	12.1	4.05E-03	6.56E-04	0.19		107.8
9	6	1014.7	1197	18.72	1.24	-3.46	2.04E-02	-1.88E-04	0.51		10.7
	2	7.56E-02	65.7	5.46	0.72	11.34	4.05E-03	6.16E-04	0.19		106.9
9	7	1014.7	1197	18.89	1.25	-3.6	2.06E-02	-1.96E-04	0.52		10.6
	2	7.56E-02	65.7	5.49	0.73	11.24	4.06E-03	6.10E-04	0.19		107.8
9	8	1014.7	1197	18.92	1.25	-3.97	2.07E-02	-2.15E-04	0.52		10.8
	2	7.56E-02	65.7	5.48	0.73	11.48	4.06E-03	6.23E-04	0.19		109.1
9	9	1014.7	1197	18.74	1.24	-2.81	2.05E-02	-1.52E-04	0.51		10.8
	2	7.56E-02	65.7	5.46	0.72	11.34	4.04E-03	6.15E-04	0.19		103.9
9	10	1014.7	0	0	0	0					NA
	2	7.56E-02	65.7	0	0	0			0		

run	point	p [mbar]	RPM [~]	T [lb]	P [hp]	Mx [in-lb]	CT [~]	CMx [~]	FM [~]	Re.75 [~]	V [ft/s]
	n [~]	rho [lb/ft3]	T [F]	Q [ft-lb]	Pi [hp]	My [in-lb]	CP [~]	CMy [~]	Mtip [~]	nu [ft2/s]	phi [deg]
10	1	1014.7	0	0	0	0					NA
	2	7.56E-02	65.7	0	0	0			0		
10	2	1014.7	1196	18.75	1.24	-3.44	2.05E-02	-1.87E-04	0.51		11.3
	2	7.56E-02	65.7	5.46	0.72	12.06	4.05E-03	6.56E-04	0.19		105.9
10	3	1014.7	1196	18.82	1.25	-3.59	2.06E-02	-1.95E-04	0.51		10.9
	2	7.56E-02	65.7	5.49	0.73	11.62	4.07E-03	6.32E-04	0.19		107.2
10	4	1014.7	1196	18.8	1.25	-4.07	2.06E-02	-2.21E-04	0.51		11
	2	7.56E-02	65.7	5.48	0.73	11.23	4.06E-03	6.10E-04	0.19		109.9
10	5	1014.7	1196	18.69	1.24	-3.93	2.04E-02	-2.14E-04	0.51		11
	2	7.56E-02	65.7	5.46	0.72	11.58	4.05E-03	6.29E-04	0.19		108.8
10	6	1014.7	1196	18.8	1.25	-4.15	2.06E-02	-2.26E-04	0.51		11.1
	2	7.56E-02	65.7	5.49	0.73	11.63	4.07E-03	6.32E-04	0.19		109.7
10	7	1014.7	1196	18.62	1.24	-3.51	2.04E-02	-1.91E-04	0.51		11
	2	7.56E-02	65.7	5.46	0.72	11.8	4.05E-03	6.41E-04	0.19		106.6
10	8	1014.7	1196	18.79	1.25	-3.98	2.06E-02	-2.16E-04	0.51		10.9
	2	7.56E-02	65.7	5.49	0.73	11.45	4.07E-03	6.22E-04	0.19		109.2
10	9	1014.7	1196	18.7	1.24	-3.3	2.04E-02	-1.79E-04	0.51		10.8
	2	7.56E-02	65.7	5.44	0.72	11.69	4.04E-03	6.36E-04	0.19		105.8
10	10	1014.7	1196	18.81	1.24	-2.71	2.06E-02	-1.47E-04	0.52		10.9
	2	7.56E-02	65.7	5.46	0.73	10.97	4.05E-03	5.97E-04	0.19		103.8
10	11	1014.7	0	0	0	0					NA
	2	7.56E-02	65.7	0	0	0			0		
11	1	1014.7	0	0	0	0					NA
	2	7.56E-02	65.7	0	0	0			0		
11	2	1014.7	1198	18.78	1.25	-3.78	2.05E-02	-2.05E-04	0.51		11.1
	2	7.56E-02	65.7	5.49	0.73	11.81	4.05E-03	6.40E-04	0.19		107.8

run	point	p [mbar]	RPM [~]	T [lb]	P [hp]	Mx [in-lb]	CT [~]	CMx [~]	FM [~]	Re.75 [~]	V [ft/s]
	n [~]	rho [lb/ft3]	T [F]	Q [ft-lb]	Pi [hp]	My [in-lb]	CP [~]	CMy [~]	Mtip [~]	nu [ft2/s]	phi [deg]
11	3	1014.7	1198	18.72	1.25	-3.46	2.04E-02	-1.87E-04	0.51		11.1
	2	7.56E-02	65.7	5.46	0.72	12.31	4.03E-03	6.66E-04	0.19		105.7
11	4	1014.7	1198	18.65	1.25	-3.69	2.03E-02	-2.00E-04	0.51		10.9
	2	7.56E-02	65.7	5.47	0.72	11.36	4.04E-03	6.15E-04	0.19		108
11	5	1014.7	1198	18.93	1.26	-3.61	2.06E-02	-1.95E-04	0.51		11.1
	2	7.56E-02	65.7	5.51	0.73	11.28	4.07E-03	6.11E-04	0.19		107.7
11	6	1014.7	1198	18.93	1.26	-4.41	2.06E-02	-2.39E-04	0.51		11.1
	2	7.56E-02	65.7	5.52	0.73	10.73	4.07E-03	5.81E-04	0.19		112.3
11	7	1014.7	1198	18.93	1.26	-4.68	2.06E-02	-2.54E-04	0.51		11
	2	7.56E-02	65.7	5.52	0.73	11.15	4.07E-03	6.04E-04	0.19		112.8
11	8	1014.7	1198	19.01	1.26	-4.43	2.07E-02	-2.40E-04	0.52		11
	2	7.56E-02	65.7	5.51	0.74	11.43	4.07E-03	6.19E-04	0.19		111.2
11	9	1014.7	1198	18.84	1.26	-4.31	2.05E-02	-2.33E-04	0.51		11
	2	7.56E-02	65.7	5.51	0.73	11.67	4.07E-03	6.32E-04	0.19		110.3
11	10	1014.7	1198	19.04	1.26	-4.07	2.07E-02	-2.20E-04	0.52		10.9
	2	7.56E-02	65.7	5.51	0.74	10.94	4.07E-03	5.92E-04	0.19		110.4
11	11	1014.7	1198	18.9	1.26	-3.89	2.06E-02	-2.11E-04	0.51		10.8
	2	7.56E-02	65.7	5.51	0.73	10.47	4.07E-03	5.67E-04	0.19		110.4
11	12	1014.7	1198	18.91	1.25	-3.75	2.06E-02	-2.03E-04	0.52		10.7
	2	7.56E-02	65.7	5.5	0.73	11.67	4.06E-03	6.32E-04	0.19		107.8
11	13	1014.7	1198	18.9	1.25	-2.78	2.06E-02	-1.50E-04	0.52		11.1
	2	7.56E-02	65.7	5.48	0.73	10.24	4.05E-03	5.54E-04	0.19		105.2
11	14	1014.7	1198	18.89	1.25	-2.81	2.06E-02	-1.52E-04	0.52		10.9
	2	7.56E-02	65.7	5.47	0.73	11.67	4.04E-03	6.32E-04	0.19		103.6
11	15	1014.7	1198	18.82	1.25	-3.77	2.05E-02	-2.04E-04	0.51		11
	2	7.56E-02	65.7	5.47	0.73	11.29	4.04E-03	6.11E-04	0.19		108.5
11	16	1014.7	0	0	0	0					NA

run	point n [~]	p [mbar] rho [lb/ft3]	RPM [~] T [F]	T [lb] Q [ft-lb]	P [hp] Pi [hp]	Mx [in-lb] My [in-lb]	CT [~] CP [~]	CMx [~] CMy [~]	FM [~] Mtip [~]	Re.75 [~] nu [ft2/s]	V [ft/s] phi [deg]
	2	7.56E-02	65.7	0	0	0			0		
12	1	1014.7	0	0	0	0					NA
	2	7.56E-02	65.7	0	0	0			0		
12	2	1014.7	1197	18.91	1.25	-3.4	2.06E-02	-1.84E-04	0.52		10.9
	2	7.56E-02	65.7	5.48	0.73	11.54	4.05E-03	6.26E-04	0.19		106.4
12	3	1014.7	1198	19.1	1.26	-3.36	2.08E-02	-1.82E-04	0.52		11.2
	2	7.56E-02	65.7	5.51	0.75	10.92	4.07E-03	5.92E-04	0.19		107.1
12	4	1014.7	1198	19.03	1.25	-4.34	2.07E-02	-2.35E-04	0.52		11.2
	2	7.56E-02	65.7	5.5	0.74	11.49	4.06E-03	6.23E-04	0.19		110.7
12	5	1014.7	1198	18.99	1.25	-3.34	2.07E-02	-1.81E-04	0.52		10.8
	2	7.56E-02	65.7	5.48	0.74	10.42	4.05E-03	5.65E-04	0.19		107.8
12	6	1014.7	1198	19.08	1.25	-3.8	2.08E-02	-2.06E-04	0.52		10.8
	2	7.56E-02	65.7	5.49	0.74	11.4	4.05E-03	6.18E-04	0.19		108.5
12	7	1014.7	1197	18.99	1.25	-3.71	2.07E-02	-2.01E-04	0.52		10.7
	2	7.56E-02	65.7	5.5	0.74	10.87	4.06E-03	5.89E-04	0.19		108.9
12	8	1014.7	1198	18.74	1.24	-3.46	2.04E-02	-1.88E-04	0.51		11
	2	7.56E-02	65.7	5.44	0.72	11.1	4.03E-03	6.02E-04	0.19		107.3
12	9	1014.7	1198	19.16	1.26	-4.85	2.09E-02	-2.63E-04	0.52		11.2
	2	7.56E-02	65.7	5.51	0.75	11.21	4.07E-03	6.08E-04	0.19		113.4
12	10	1014.7	1198	19.1	1.25	-3.86	2.08E-02	-2.09E-04	0.52		10.9
	2	7.56E-02	65.7	5.5	0.75	10.16	4.06E-03	5.50E-04	0.19		110.8
12	11	1014.7	1197	19.3	1.26	-4.93	2.10E-02	-2.67E-04	0.53		11.1
	2	7.56E-02	65.7	5.52	0.76	10.85	4.08E-03	5.88E-04	0.19		114.4
12	12	1014.7	1198	19.09	1.25	-4.36	2.08E-02	-2.36E-04	0.52		11.1
	2	7.56E-02	65.7	5.49	0.74	11.46	4.05E-03	6.21E-04	0.19		110.8
12	13	1014.7	0	0	0	0					NA

run	point n [~]	p [mbar] rho [lb/ft3]	RPM [~] T [F]	T [lb] Q [ft-lb]	P [hp] Pi [hp]	Mx [in-lb] My [in-lb]	CT [~] CP [~]	CMx [~] CMy [~]	FM [~] Mtip [~]	Re.75 [~] nu [ft2/s]	V [ft/s] phi [deg]
	2	7.56E-02	65.7	0	0	0			0		
13	1	1014.7	0	0	0	0					NA
	2	7.56E-02	65.7	0	0	0			0		
13	2	1014.7	1198	19	1.25	-3.16	2.07E-02	-1.71E-04	0.52		11
	2	7.56E-02	65.7	5.46	0.74	11.79	4.03E-03	6.39E-04	0.19		105
13	3	1014.7	1198	19.09	1.25	-3.92	2.08E-02	-2.12E-04	0.52		11.1
	2	7.56E-02	65.7	5.48	0.74	11.41	4.05E-03	6.18E-04	0.19		109
13	4	1014.7	1198	19.13	1.26	-4.39	2.08E-02	-2.38E-04	0.52		11.2
	2	7.56E-02	65.7	5.51	0.75	11.7	4.07E-03	6.33E-04	0.19		110.6
13	5	1014.7	1198	19.06	1.25	-3.34	2.08E-02	-1.81E-04	0.52		11
	2	7.56E-02	65.7	5.49	0.74	10.81	4.06E-03	5.86E-04	0.19		107.2
13	6	1014.7	1198	19.03	1.26	-4.42	2.07E-02	-2.39E-04	0.52		11.1
	2	7.56E-02	65.7	5.52	0.74	10.67	4.07E-03	5.78E-04	0.19		112.5
13	7	1014.7	1198	18.92	1.25	-3.06	2.06E-02	-1.66E-04	0.52		11
	2	7.56E-02	65.7	5.47	0.73	11.26	4.04E-03	6.10E-04	0.19		105.2
13	8	1014.7	1198	18.98	1.26	-4.67	2.07E-02	-2.53E-04	0.52		11.2
	2	7.56E-02	65.7	5.52	0.74	11.25	4.07E-03	6.09E-04	0.19		112.6
13	9	1014.7	1198	18.8	1.25	-3.57	2.05E-02	-1.93E-04	0.51		10.8
	2	7.56E-02	65.7	5.49	0.73	10.41	4.05E-03	5.63E-04	0.19		108.9
13	10	1014.7	0	0	0	0					NA
	2	7.56E-02	65.7	0	0	0			0		
14	1	1014.7	0	0	0	0					NA
	2	7.56E-02	65.7	0	0	0			0		
14	2	1014.7	1198	18.64	1.25	-5.56	2.03E-02	-3.01E-04	0.5		11.4
	2	7.56E-02	65.7	5.5	0.72	12.2	4.06E-03	6.61E-04	0.19		114.5

run	point n [~]	p [mbar] rho [lb/ft3]	RPM [~] T [F]	T [lb] Q [ft-lb]	P [hp] Pi [hp]	Mx [in-lb] My [in-lb]	CT [~] CP [~]	CMx [~] CMy [~]	FM [~] Mtip [~]	Re.75 [~] nu [ft2/s]	V [ft/s] phi [deg]
14	3	1014.7	1198	18.77	1.26	-4.94	2.05E-02	-2.67E-04	0.51		11.2
	2	7.56E-02	65.7	5.53	0.73	11.5	4.08E-03	6.23E-04	0.19		113.2
14	4	1014.7	1198	18.51	1.25	-4.14	2.02E-02	-2.24E-04	0.5		11
	2	7.56E-02	65.7	5.48	0.71	11.27	4.05E-03	6.10E-04	0.19		110.2
15	1	1014	0	0	0	0					NA
	2	7.56E-02	65.7	0	0	0			0		
15	2	1014	500	3.06	0.08	-0.61	1.92E-02	-1.89E-04	0.31		4.1
	2	7.56E-02	65.7	0.85	0.05	1.09	5.98E-03	3.38E-04	0.08		119.2
15	3	1014	1000	14.05	0.73	-4.66	2.20E-02	-3.63E-04	0.54		9.1
	2	7.56E-02	65.7	3.84	0.47	7.42	4.28E-03	5.77E-04	0.16		122.2
15	4	1014	1196	20.46	1.25	-5.21	2.24E-02	-2.83E-04	0.58		10.8
	2	7.56E-02	65.7	5.5	0.83	9.88	4.08E-03	5.37E-04	0.19		117.8
15	5	1014	1196	20.38	1.26	-6.43	2.23E-02	-3.49E-04	0.58		10.9
	2	7.56E-02	65.7	5.52	0.82	9.11	4.09E-03	4.95E-04	0.19		125.2
15	6	1014	1196	20.44	1.26	-6.16	2.24E-02	-3.35E-04	0.58		10.9
	2	7.56E-02	65.7	5.54	0.83	9.4	4.10E-03	5.11E-04	0.19		123.2
15	7	1014	1196	20.28	1.26	-6.15	2.22E-02	-3.34E-04	0.57		11.1
	2	7.56E-02	65.7	5.52	0.82	9.67	4.09E-03	5.25E-04	0.19		122.5
15	8	1014	1196	20.35	1.26	-6.36	2.23E-02	-3.46E-04	0.57		11
	2	7.56E-02	65.7	5.55	0.82	9.47	4.11E-03	5.15E-04	0.19		123.9
15	9	1014	1196	20.28	1.26	-5.94	2.22E-02	-3.23E-04	0.57		10.9
	2	7.56E-02	65.7	5.53	0.82	8.82	4.09E-03	4.80E-04	0.19		124
15	10	1014	1196	20.14	1.26	-5.99	2.20E-02	-3.26E-04	0.57		10.7
	2	7.56E-02	65.7	5.52	0.81	8.88	4.09E-03	4.82E-04	0.19		124
15	11	1014	1196	20.03	1.25	-5.12	2.19E-02	-2.79E-04	0.56		10.6
	2	7.56E-02	65.7	5.51	0.8	8.69	4.08E-03	4.73E-04	0.19		120.5

run	point	p [mbar]	RPM [~]	T [lb]	P [hp]	Mx [in-lb]	CT [~]	CMx [~]	FM [~]	Re.75 [~]	V [ft/s]
	n [~]	rho [lb/ft3]	T [F]	Q [ft-lb]	Pi [hp]	My [in-lb]	CP [~]	CMy [~]	Mtip [~]	nu [ft2/s]	phi [deg]
15	12	1014	1196	19.97	1.25	-4.96	2.18E-02	-2.69E-04	0.56		10.9
	2	7.56E-02	65.7	5.51	0.8	9.76	4.08E-03	5.30E-04	0.19		116.9
15	13	1014	1196	19.81	1.25	-4.08	2.17E-02	-2.22E-04	0.56		10.6
	2	7.56E-02	65.7	5.48	0.79	9.51	4.06E-03	5.17E-04	0.19		113.2
15	14	1014	1196	20	1.26	-4.99	2.19E-02	-2.71E-04	0.56		10.6
	2	7.56E-02	65.7	5.54	0.8	9.18	4.10E-03	4.99E-04	0.19		118.5
15	15	1014	1196	20.13	1.26	-5.79	2.20E-02	-3.15E-04	0.56		11.1
	2	7.56E-02	65.7	5.54	0.81	9.78	4.10E-03	5.32E-04	0.19		120.6
15	16	1014	1196	19.87	1.25	-5	2.17E-02	-2.72E-04	0.56		10.7
	2	7.56E-02	65.7	5.51	0.79	9.38	4.08E-03	5.10E-04	0.19		118.1
15	17	1014	1196	19.85	1.26	-4.87	2.17E-02	-2.65E-04	0.55		11.1
	2	7.56E-02	65.7	5.52	0.79	10	4.09E-03	5.44E-04	0.19		116
15	18	1014	1196	19.87	1.26	-4.83	2.17E-02	-2.62E-04	0.55		10.9
	2	7.56E-02	65.7	5.54	0.79	9.39	4.10E-03	5.10E-04	0.19		117.2
15	19	1014	1196	19.84	1.26	-4.68	2.17E-02	-2.54E-04	0.55		11
	2	7.56E-02	65.7	5.51	0.79	10.1	4.09E-03	5.49E-04	0.19		114.8
15	20	1014	1196	19.77	1.26	-5.31	2.16E-02	-2.89E-04	0.55		10.8
	2	7.56E-02	65.7	5.52	0.78	9.4	4.09E-03	5.11E-04	0.19		119.5
15	21	1014	1196	19.68	1.25	-4.54	2.15E-02	-2.47E-04	0.55		10.9
	2	7.56E-02	65.7	5.51	0.78	10.48	4.08E-03	5.70E-04	0.19		113.4
15	22	1014	1196	19.67	1.25	-4.12	2.15E-02	-2.24E-04	0.55		10.8
	2	7.56E-02	65.7	5.49	0.78	9.89	4.07E-03	5.38E-04	0.19		112.6
15	23	1014	1196	19.66	1.26	-4.96	2.15E-02	-2.70E-04	0.55		11
	2	7.56E-02	65.7	5.52	0.78	9.87	4.09E-03	5.36E-04	0.19		116.7
15	24	1014	1196	19.58	1.26	-4.82	2.14E-02	-2.62E-04	0.54		11
	2	7.56E-02	65.7	5.52	0.77	10.41	4.09E-03	5.66E-04	0.19		114.8
15	25	1014	1197	19.44	1.25	-4.18	2.12E-02	-2.27E-04	0.54		10.7

run	point	p [mbar]	RPM [~]	T [lb]	P [hp]	Mx [in-lb]	CT [~]	CMx [~]	FM [~]	Re.75 [~]	V [ft/s]
	n [~]	rho [lb/ft3]	T [F]	Q [ft-lb]	Pi [hp]	My [in-lb]	CP [~]	CMy [~]	Mtip [~]	nu [ft2/s]	phi [deg]
	2	7.56E-02	65.7	5.5	0.77	9.99	4.07E-03	5.42E-04	0.19		112.7
15	26	1014	1196	19.42	1.25	-4.17	2.12E-02	-2.27E-04	0.54		10.6
	2	7.56E-02	65.7	5.49	0.76	9.99	4.07E-03	5.43E-04	0.19		112.7
15	27	1014	1196	19.48	1.26	-4.39	2.13E-02	-2.39E-04	0.54		11
	2	7.56E-02	65.7	5.54	0.77	10.62	4.10E-03	5.77E-04	0.19		112.5
15	28	1014	1196	19.51	1.26	-4.49	2.13E-02	-2.44E-04	0.54		10.9
	2	7.56E-02	65.7	5.51	0.77	10.54	4.08E-03	5.73E-04	0.19		113.1
15	29	1014	1196	19.49	1.26	-5.12	2.13E-02	-2.78E-04	0.54		10.9
	2	7.56E-02	65.7	5.54	0.77	10.14	4.10E-03	5.51E-04	0.19		116.8
15	30	1014	1196	19.32	1.25	-3.87	2.11E-02	-2.10E-04	0.53		10.8
	2	7.56E-02	65.7	5.5	0.76	10.19	4.08E-03	5.54E-04	0.19		110.8
15	31	1014	1196	19.32	1.25	-3.97	2.11E-02	-2.16E-04	0.53		10.9
	2	7.56E-02	65.7	5.51	0.76	10.32	4.08E-03	5.61E-04	0.19		111
15	32	1014	1196	19.27	1.25	-4.64	2.11E-02	-2.52E-04	0.53		10.9
	2	7.56E-02	65.7	5.51	0.76	11.08	4.08E-03	6.02E-04	0.19		112.7
15	33	1014	1196	19.19	1.25	-5.41	2.10E-02	-2.94E-04	0.53		10.9
	2	7.56E-02	65.7	5.51	0.75	10.76	4.09E-03	5.85E-04	0.19		116.7
15	34	1014	1196	19.26	1.26	-3.91	2.11E-02	-2.13E-04	0.53		10.6
	2	7.56E-02	65.7	5.51	0.75	9.9	4.09E-03	5.39E-04	0.19		111.5
15	35	1014	1196	19.08	1.25	-3.64	2.09E-02	-1.98E-04	0.52		10.6
	2	7.56E-02	65.7	5.49	0.74	11.03	4.07E-03	6.00E-04	0.19		108.3
15	36	1014	1196	18.96	1.24	-3.11	2.07E-02	-1.69E-04	0.52		10.8
	2	7.56E-02	65.7	5.45	0.74	11.32	4.04E-03	6.16E-04	0.19		105.3
15	37	1014	1196	19.25	1.26	-4.51	2.11E-02	-2.45E-04	0.53		10.6
	2	7.56E-02	65.7	5.52	0.75	10.65	4.10E-03	5.79E-04	0.19		112.9
15	38	1014	0	0	0	0					NA
	2	7.56E-02	65.7	0	0	0			0		

run	point n [~]	p [mbar] rho [lb/ft3]	RPM [~] T [F]	T [lb] Q [ft-lb]	P [hp] Pi [hp]	Mx [in-lb] My [in-lb]	CT [~] CP [~]	CMx [~] CMy [~]	FM [~] Mtip [~]	Re.75 [~] nu [ft2/s]	V [ft/s] phi [deg]
16	1	1014	0	0	0	0					NA
	2	7.56E-02	65.7	0	0	0			0		
16	2	1014	1197	18.91	1.25	-2.36	2.07E-02	-1.28E-04	0.52		10.8
	2	7.56E-02	65.7	5.47	0.73	11.15	4.05E-03	6.06E-04	0.19		101.9
16	3	1014	1197	18.93	1.25	-2.75	2.07E-02	-1.49E-04	0.52		10.6
	2	7.56E-02	65.7	5.48	0.74	11.41	4.06E-03	6.20E-04	0.19		103.5
16	4	1014	1196	19.11	1.26	-5	2.09E-02	-2.72E-04	0.52		11.1
	2	7.56E-02	65.7	5.55	0.75	11.27	4.11E-03	6.12E-04	0.19		113.9
16	5	1014	1196	19.04	1.26	-4.56	2.08E-02	-2.48E-04	0.52		11.1
	2	7.56E-02	65.7	5.54	0.74	11.3	4.10E-03	6.14E-04	0.19		112
16	6	1014	1197	18.85	1.25	-3.49	2.06E-02	-1.90E-04	0.51		10.9
	2	7.56E-02	65.7	5.51	0.73	11.33	4.08E-03	6.16E-04	0.19		107.1
16	7	1014	1197	19.07	1.26	-4.44	2.08E-02	-2.41E-04	0.52		10.9
	2	7.56E-02	65.7	5.53	0.74	11.75	4.09E-03	6.38E-04	0.19		110.7
16	8	1014	1196	18.93	1.26	-4.02	2.07E-02	-2.18E-04	0.52		11
	2	7.56E-02	65.7	5.52	0.74	11.69	4.09E-03	6.35E-04	0.19		109
16	9	1014	1196	18.9	1.26	-4.34	2.07E-02	-2.36E-04	0.51		10.8
	2	7.56E-02	65.7	5.52	0.73	11.5	4.09E-03	6.25E-04	0.19		110.7
16	10	1014	0	0	0	0					NA
	2	7.56E-02	65.7	0	0	0			0		
17	1	1014	0	0	0	0					NA
	2	7.56E-02	65.7	0	0	0			0		
17	2	1014	1196	18.97	1.25	-4.67	2.08E-02	-2.54E-04	0.52		10.9
	2	7.56E-02	65.7	5.47	0.74	12.27	4.06E-03	6.68E-04	0.19		110.8
17	3	1014	1196	19.02	1.25	-3.56	2.08E-02	-1.93E-04	0.52		10.9

run	point	p [mbar]	RPM [~]	T [lb]	P [hp]	Mx [in-lb]	CT [~]	CMx [~]	FM [~]	Re.75 [~]	V [ft/s]
	n [~]	rho [lb/ft3]	T [F]	Q [ft-lb]	Pi [hp]	My [in-lb]	CP [~]	CMy [~]	Mtip [~]	nu [ft2/s]	phi [deg]
	2	7.56E-02	65.7	5.47	0.74	11.41	4.06E-03	6.21E-04	0.19		107.3
17	4	1014	1196	18.97	1.25	-3.76	2.08E-02	-2.05E-04	0.52		10.9
	2	7.56E-02	65.7	5.48	0.74	11.85	4.07E-03	6.44E-04	0.19		107.6
17	5	1014	1196	19.24	1.25	-4.7	2.11E-02	-2.56E-04	0.53		11
	2	7.56E-02	65.7	5.5	0.75	11.8	4.08E-03	6.42E-04	0.19		111.7
17	6	1014	1196	18.97	1.24	-4.14	2.08E-02	-2.25E-04	0.52		11
	2	7.56E-02	65.7	5.47	0.74	11.46	4.06E-03	6.23E-04	0.19		109.9
17	7	1014	1196	19.17	1.26	-4.56	2.10E-02	-2.48E-04	0.53		10.7
	2	7.56E-02	65.7	5.51	0.75	10.59	4.09E-03	5.76E-04	0.19		113.3
17	8	1014	1196	18.9	1.24	-3.93	2.07E-02	-2.14E-04	0.52		10.9
	2	7.56E-02	65.7	5.46	0.73	11.64	4.05E-03	6.33E-04	0.19		108.6
17	9	1014	1196	19.08	1.25	-3.77	2.09E-02	-2.05E-04	0.52		11
	2	7.56E-02	65.7	5.48	0.74	11.67	4.07E-03	6.34E-04	0.19		107.9
17	10	1014	1196	19.19	1.25	-4.85	2.10E-02	-2.64E-04	0.53		10.9
	2	7.56E-02	65.7	5.51	0.75	11.64	4.08E-03	6.33E-04	0.19		112.6
17	11	1014	1196	19.2	1.26	-4.43	2.10E-02	-2.41E-04	0.53		10.9
	2	7.56E-02	65.7	5.52	0.75	11.21	4.09E-03	6.10E-04	0.19		111.6
17	12	1014	1196	19.08	1.25	-4.28	2.09E-02	-2.33E-04	0.52		10.8
	2	7.56E-02	65.7	5.49	0.74	11.2	4.07E-03	6.09E-04	0.19		110.9
17	13	1014	1196	19.05	1.25	-4.06	2.08E-02	-2.21E-04	0.52		10.7
	2	7.56E-02	65.7	5.49	0.74	11.1	4.07E-03	6.03E-04	0.19		110.1
17	14	1014	1196	19.11	1.25	-3.92	2.09E-02	-2.13E-04	0.53		10.8
	2	7.56E-02	65.7	5.48	0.75	11.73	4.07E-03	6.38E-04	0.19		108.5
17	15	1014	1196	19.15	1.25	-4.74	2.10E-02	-2.58E-04	0.52		11
	2	7.56E-02	65.7	5.51	0.75	11.25	4.09E-03	6.12E-04	0.19		112.9
17	16	1014	1196	19.15	1.25	-4.62	2.10E-02	-2.51E-04	0.53		11
	2	7.56E-02	65.7	5.49	0.75	11.25	4.07E-03	6.12E-04	0.19		112.3

run	point	p [mbar]	RPM [~]	T [lb]	P [hp]	Mx [in-lb]	CT [~]	CMx [~]	FM [~]	Re.75 [~]	V [ft/s]
	n [~]	rho [lb/ft3]	T [F]	Q [ft-lb]	Pi [hp]	My [in-lb]	CP [~]	CMy [~]	Mtip [~]	nu [ft2/s]	phi [deg]
17	17	1014	0	0	0	0					NA
	2	7.56E-02	65.7	0	0	0			0		
18	1	1014	0	0	0	0					NA
	2	7.56E-02	65.7	0	0	0			0		
18	2	1014	1197	18.93	1.23	-2.65	2.07E-02	-1.44E-04	0.52		10.6
	2	7.56E-02	65.7	5.42	0.74	11.67	4.02E-03	6.34E-04	0.19		102.8
18	3		1224	19.12	1.28	-4.13					
	2	0.00E+00	32	5.49	0	11.69					109.5
18	4	925	1246	19.56	1.32	-4.33	2.16E-02	-2.37E-04	0.54		3.8
	2	6.90E-02	64.8	5.56	0.81	12.65	4.15E-03	6.93E-04	0.19		108.9
18	5	909	1246	19.05	1.29	-4.18	2.13E-02	-2.33E-04	0.53		3.8
	2	6.79E-02	64	5.43	0.78	12.54	4.13E-03	6.98E-04	0.2		108.4
18	6	890	1246	18.62	1.26	-3.99	2.13E-02	-2.26E-04	0.53		3.1
	2	6.67E-02	63	5.29	0.76	12.11	4.11E-03	6.87E-04	0.2		108.2
18	7	871	1247	18.3	1.24	-4.72	2.13E-02	-2.73E-04	0.53		0.5
	2	6.53E-02	62.2	5.21	0.75	12.12	4.14E-03	7.02E-04	0.2		111.3
18	8	851	1247	17.69	1.2	-4.19	2.10E-02	-2.47E-04	0.52		NA
	2	6.41E-02	60.4	5.05	0.72	11.53	4.10E-03	6.80E-04	0.2		110
18	9	828.4	1247	17.36	1.18	-6.13	2.11E-02	-3.71E-04	0.52	1.64E+05	NA
	2	6.25E-02	59.2	4.95	0.71	11.19	4.14E-03	6.77E-04	0.2	1.93E-04	118.7
18	10	807.1	1247	16.74	1.13	-5.15	2.08E-02	-3.19E-04	0.52	1.61E+05	NA
	2	6.11E-02	57.9	4.76	0.68	11.63	4.09E-03	7.20E-04	0.2	1.97E-04	113.9
18	11	785.1	1247	16.34	1.1	-5.29	2.09E-02	-3.36E-04	0.52	1.57E+05	NA
	2	5.95E-02	56.5	4.64	0.66	10.82	4.11E-03	6.86E-04	0.2	2.02E-04	116.1
18	12	764.8	1247	15.67	1.06	-4.42	2.05E-02	-2.87E-04	0.51	1.54E+05	NA
	2	5.81E-02	55.3	4.47	0.63	11.41	4.07E-03	7.41E-04	0.2	2.07E-04	111.2

run	point	p [mbar]	RPM [~]	T [lb]	P [hp]	Mx [in-lb]	CT [~]	CMx [~]	FM [~]	Re.75 [~]	V [ft/s]
	n [~]	rho [lb/ft3]	T [F]	Q [ft-lb]	Pi [hp]	My [in-lb]	CP [~]	CMy [~]	Mtip [~]	nu [ft2/s]	phi [deg]
18	13	744.7	1247	15.3	1.04	-4.86	2.05E-02	-3.24E-04	0.51	1.50E+05	NA
	2	5.67E-02	54.1	4.38	0.62	9.93	4.10E-03	6.61E-04	0.2	2.11E-04	116.1
18	14	723.1	1247	14.88	1	-5.03	2.05E-02	-3.44E-04	0.51	1.47E+05	NA
	2	5.52E-02	52.9	4.22	0.6	10.53	4.08E-03	7.20E-04	0.2	2.17E-04	115.5
18	15	704	1247	14.41	0.97	-4.11	2.03E-02	-2.88E-04	0.5	1.43E+05	NA
	2	5.39E-02	51.8	4.1	0.58	10.25	4.08E-03	7.18E-04	0.2	2.22E-04	111.9
18	16	684.9	1247	13.98	0.95	-4.75	2.02E-02	-3.41E-04	0.5	1.40E+05	NA
	2	5.25E-02	50.7	3.98	0.56	9.76	4.08E-03	7.02E-04	0.2	2.27E-04	116
18	17	666.8	1247	13.64	0.92	-4.08	2.02E-02	-3.01E-04	0.5	1.37E+05	NA
	2	5.12E-02	49.8	3.86	0.55	9.53	4.08E-03	7.02E-04	0.2	2.32E-04	113.2
18	18	648.4	1247	13.19	0.89	-3.81	2.01E-02	-2.88E-04	0.49	1.33E+05	NA
	2	4.99E-02	48.9	3.74	0.53	10.14	4.08E-03	7.67E-04	0.2	2.38E-04	110.6
18	19	630.7	1248	12.74	0.86	-3.96	1.99E-02	-3.08E-04	0.49	1.30E+05	NA
	2	4.86E-02	48.2	3.64	0.51	9.98	4.09E-03	7.75E-04	0.2	2.44E-04	111.7
18	20	613.9	1248	12.39	0.84	-4.74	1.99E-02	-3.78E-04	0.48	1.27E+05	NA
	2	4.74E-02	47.4	3.55	0.49	9.62	4.11E-03	7.66E-04	0.2	2.50E-04	116.3
18	21	597.5	1247	12.13	0.82	-4.06	2.00E-02	-3.32E-04	0.48	1.24E+05	NA
	2	4.62E-02	46.8	3.45	0.48	9.17	4.12E-03	7.49E-04	0.2	2.57E-04	113.9
18	22	581.4	1248	11.76	0.8	-4.45	1.99E-02	-3.73E-04	0.48	1.21E+05	NA
	2	4.50E-02	46.2	3.37	0.47	8.47	4.15E-03	7.11E-04	0.2	2.63E-04	117.7
18	23	565.7	1248	11.37	0.77	-3.56	1.97E-02	-3.07E-04	0.47	1.18E+05	NA
	2	4.38E-02	45.7	3.25	0.45	8.76	4.13E-03	7.55E-04	0.2	2.70E-04	112.1
18	24	550	1248	11.08	0.75	-3.86	1.97E-02	-3.41E-04	0.47	1.15E+05	NA
	2	4.27E-02	45.1	3.16	0.44	8.67	4.16E-03	7.67E-04	0.2	2.77E-04	114
18	25	534.2	1248	10.66	0.73	-4.06	1.95E-02	-3.69E-04	0.46	1.11E+05	NA
	2	4.15E-02	44.6	3.05	0.42	8.26	4.16E-03	7.52E-04	0.2	2.85E-04	116.1
18	26	519.4	1248	10.26	0.7	-3.64	1.93E-02	-3.40E-04	0.46	1.09E+05	NA

run	point	p [mbar]	RPM [~]	T [lb]	P [hp]	Mx [in-lb]	CT [~]	CMx [~]	FM [~]	Re.75 [~]	V [ft/s]
	n [~]	rho [lb/ft3]	T [F]	Q [ft-lb]	Pi [hp]	My [in-lb]	CP [~]	CMy [~]	Mtip [~]	nu [ft2/s]	phi [deg]
	2	4.04E-02	44.1	2.94	0.4	8.06	4.14E-03	7.54E-04	0.2	2.93E-04	114.3
18	27	504.4	1248	10.04	0.68	-3.71	1.94E-02	-3.57E-04	0.46	1.06E+05	NA
	2	3.92E-02	43.7	2.87	0.39	7.91	4.18E-03	7.61E-04	0.2	3.01E-04	115.1
18	28	490.3	1248	9.68	0.66	-4.02	1.93E-02	-3.98E-04	0.45	1.03E+05	NA
	2	3.82E-02	43.4	2.78	0.38	7.74	4.19E-03	7.66E-04	0.2	3.09E-04	117.4
18	29	476.4	1248	9.27	0.63	-3.11	1.90E-02	-3.17E-04	0.45	9.99E+04	NA
	2	3.71E-02	43.1	2.65	0.36	7.71	4.15E-03	7.84E-04	0.2	3.18E-04	112
18	30	463.2	1248	9.02	0.62	-3.43	1.90E-02	-3.59E-04	0.44	9.72E+04	NA
	2	3.61E-02	42.8	2.59	0.35	7.59	4.20E-03	7.94E-04	0.2	3.27E-04	114.3
18	31	449.2	1248	8.73	0.59	-3.16	1.89E-02	-3.40E-04	0.44	9.44E+04	NA
	2	3.50E-02	42.5	2.5	0.34	7.32	4.20E-03	7.89E-04	0.2	3.36E-04	113.3
18	32	436.3	1248	8.51	0.58	-3.17	1.90E-02	-3.51E-04	0.44	9.18E+04	NA
	2	3.40E-02	42.3	2.42	0.33	7.39	4.22E-03	8.19E-04	0.2	3.46E-04	113.2
18	33	424.4	1248	8.22	0.56	-3.14	1.89E-02	-3.58E-04	0.43	8.93E+04	NA
	2	3.31E-02	42.1	2.35	0.32	7.27	4.23E-03	8.28E-04	0.2	3.56E-04	113.3
18	34	412.6	1248	8.02	0.54	-3.23	1.89E-02	-3.78E-04	0.43	8.69E+04	NA
	2	3.22E-02	41.9	2.27	0.31	7.28	4.25E-03	8.53E-04	0.2	3.66E-04	113.9
18	35	401.5	1248	7.63	0.52	-2.76	1.85E-02	-3.32E-04	0.42	8.46E+04	NA
	2	3.13E-02	41.7	2.17	0.29	6.72	4.22E-03	8.09E-04	0.2	3.75E-04	112.3
18	36	390.7	1248	7.45	0.5	-2.73	1.85E-02	-3.38E-04	0.42	8.24E+04	NA
	2	3.05E-02	41.5	2.11	0.29	6.73	4.24E-03	8.32E-04	0.2	3.86E-04	112.1
18	37	380.2	1248	7.12	0.48	-2.53	1.82E-02	-3.22E-04	0.41	8.02E+04	NA
	2	2.97E-02	41.4	2.02	0.27	6.92	4.23E-03	8.78E-04	0.2	3.96E-04	110.1
18	38	369.9	1248	7.02	0.47	-2.88	1.84E-02	-3.76E-04	0.41	7.81E+04	NA
	2	2.89E-02	41.3	1.98	0.27	6.32	4.28E-03	8.25E-04	0.2	4.07E-04	114.5
18	39	360.3	1248	6.78	0.45	-2.82	1.83E-02	-3.78E-04	0.41	7.60E+04	NA
	2	2.82E-02	41.3	1.91	0.26	6.52	4.27E-03	8.74E-04	0.2	4.18E-04	113.4

run	point	p [mbar]	RPM [~]	T [lb]	P [hp]	Mx [in-lb]	CT [~]	CMx [~]	FM [~]	Re.75 [~]	V [ft/s]
	n [~]	rho [lb/ft3]	T [F]	Q [ft-lb]	Pi [hp]	My [in-lb]	CP [~]	CMy [~]	Mtip [~]	nu [ft2/s]	phi [deg]
18	40	350.6	1248	6.61	0.44	-2.99	1.83E-02	-4.11E-04	0.41	7.40E+04	NA
	2	2.74E-02	41.3	1.86	0.25	6.24	4.31E-03	8.59E-04	0.2	4.29E-04	115.6
18	41	341.2	1248	6.38	0.42	-2.73	1.82E-02	-3.86E-04	0.4	7.20E+04	NA
	2	2.67E-02	41.2	1.78	0.24	6.27	4.29E-03	8.87E-04	0.2	4.41E-04	113.5
18	42	331.6	1249	6.24	0.41	-2.44	1.83E-02	-3.55E-04	0.4	7.00E+04	NA
	2	2.59E-02	41.2	1.73	0.24	5.93	4.34E-03	8.63E-04	0.2	4.54E-04	112.4
18	43	311.8	1249	5.83	0.39	-2.57	1.81E-02	-3.98E-04	0.39	6.59E+04	NA
	2	2.44E-02	41.1	1.62	0.22	5.68	4.40E-03	8.78E-04	0.2	4.83E-04	114.4
18	44	294.7	1249	5.39	0.36	-2.52	1.77E-02	-4.12E-04	0.38	6.23E+04	NA
	2	2.30E-02	40.8	1.51	0.2	5.32	4.44E-03	8.71E-04	0.2	5.10E-04	115.3
18	45	279.4	1249	4.98	0.33	-2.54	1.73E-02	-4.38E-04	0.36	5.91E+04	NA
	2	2.19E-02	40.5	1.4	0.18	5.54	4.45E-03	9.54E-04	0.2	5.38E-04	114.7
18	46	265.5	1249	4.74	0.31	-2.91	1.73E-02	-5.27E-04	0.36	5.63E+04	NA
	2	2.08E-02	39.9	1.32	0.18	5.14	4.50E-03	9.31E-04	0.2	5.65E-04	119.5
18	47	247.2	1249	4.21	0.28	-2.31	1.65E-02	-4.49E-04	0.33	5.26E+04	NA
	2	1.94E-02	39.1	1.18	0.15	4.78	4.51E-03	9.27E-04	0.2	6.05E-04	115.8
18	48	233.2	1249	3.95	0.26	-2.45	1.64E-02	-5.03E-04	0.32	4.97E+04	NA
	2	1.83E-02	38.6	1.11	0.14	4.4	4.59E-03	9.04E-04	0.2	6.40E-04	119.1
18	49	211.4	1249	3.45	0.23	-2.4	1.57E-02	-5.43E-04	0.3	4.51E+04	NA
	2	1.66E-02	38	0.97	0.12	4.52	4.68E-03	1.02E-03	0.2	7.05E-04	118
18	50	190.7	1249	2.95	0.2	-2.53	1.49E-02	-6.33E-04	0.27	4.08E+04	NA
	2	1.50E-02	37.1	0.84	0.1	4.22	4.77E-03	1.06E-03	0.2	7.79E-04	120.9
18	51	171	1250	2.49	0.17	-2.43	1.39E-02	-6.76E-04	0.24	3.68E+04	NA
	2	1.35E-02	36	0.71	0.08	3.86	4.89E-03	1.08E-03	0.2	8.65E-04	122.2
18	52	152.1	1250	2	0.14	-2.26	1.26E-02	-7.06E-04	0.2	3.29E+04	NA
	2	1.20E-02	34.7	0.59	0.06	3.46	5.03E-03	1.08E-03	0.2	9.68E-04	123.1
18	53	135.2	1250	1.57	0.11	-2.18	1.11E-02	-7.65E-04	0.16	2.93E+04	NA

run	point	p [mbar]	RPM [~]	T [lb]	P [hp]	Mx [in-lb]	CT [~]	CMx [~]	FM [~]	Re.75 [~]	V [ft/s]
	n [~]	rho [lb/ft3]	T [F]	Q [ft-lb]	Pi [hp]	My [in-lb]	CP [~]	CMy [~]	Mtip [~]	nu [ft2/s]	phi [deg]
	2	1.07E-02	33.5	0.47	0.05	3.48	5.12E-03	1.22E-03	0.2	1.08E-03	122.1
18	54	118.9	1250	1.2	0.09	-2.11	9.64E-03	-8.39E-04	0.13	2.59E+04	NA
	2	9.46E-03	32.4	0.37	0.03	2.9	5.34E-03	1.15E-03	0.2	1.23E-03	126
18	55	104.3	1250	0.83	0.06	-1.78	7.58E-03	-8.06E-04	0.08	2.28E+04	NA
	2	8.31E-03	31.4	0.26	0.02	2.83	5.50E-03	1.28E-03	0.2	1.40E-03	122.1
18	56		1250	0.56	0.04	-1.86					
	2	0.00E+00	30.3	0.17	0	2.52			0.2		126.3
18	57		1250	0.29	0.02	-1.82					
	2	0.00E+00	29.2	0.08	0	2.12			0.2		130.7
18	58		1250	0.09	0	-1.68					
	2	0.00E+00	28.4	0.01	0	1.99			0.2		130.3
18	59		1250	-0.09	-0.02	-1.56					
	2	0.00E+00	27.5	-0.07	0	1.7			0.2		-47.6
18	60		1250	-0.17	-0.03	-1.41					
	2	0.00E+00	27.1	-0.11	0	1.62			0.2		-49
18	61		1250	-0.21	-0.04	-1.2					
	2	0.00E+00	27	-0.15	0	1.58			0.2		-52.6
18	62		1250	-0.23	-0.04	-1.26					
	2	0.00E+00	27.3	-0.19	0	1.44			0.2		-48.8
18	63		1250	-0.26	-0.05	-0.51					
	2	0.00E+00	27.7	-0.21	0	1.51			0.2		-71.5
18	64		1250	-0.24	-0.05	-0.64					
	2	0.00E+00	28.4	-0.23	0	1.5			0.2		-66.8
18	65		1250	-0.23	-0.06	-0.48					
	2	0.00E+00	29.2	-0.25	0	1.46			0.2		-71.7
18	66	58.6	1250	-0.22	-0.06	-0.31	-3.62E-03	-2.45E-04	-0.03	1.28E+04	NA
	2	4.68E-03	30.1	-0.26	0	1.49	4.70E-03	1.19E-03	0.2	2.48E-03	-78.4

run	point	p [mbar]	RPM [~]	T [lb]	P [hp]	Mx [in-lb]	CT [~]	CMx [~]	FM [~]	Re.75 [~]	V [ft/s]
	n [~]	rho [lb/ft3]	T [F]	Q [ft-lb]	Pi [hp]	My [in-lb]	CP [~]	CMy [~]	Mtip [~]	nu [ft2/s]	phi [deg]
18	67	55.9	1250	-0.22	-0.07	-0.36	-3.68E-03	-3.06E-04	-0.03	1.22E+04	NA
	2	4.46E-03	31	-0.28	0	1.31	4.79E-03	1.10E-03	0.2	2.61E-03	-74.5
18	68	54.6	1250	-0.2	-0.07	-0.3	-3.40E-03	-2.57E-04	-0.03	1.19E+04	NA
	2	4.35E-03	31.9	-0.29	0	1.34	4.79E-03	1.16E-03	0.2	2.68E-03	-77.5
18	69	52	1250	-0.16	-0.07	-0.23	-2.96E-03	-2.05E-04	-0.02	1.13E+04	NA
	2	4.13E-03	32.8	-0.3	0	1.37	4.93E-03	1.25E-03	0.2	2.83E-03	-80.7
18	70	50.7	1250	-0.14	-0.07	-0.2	-2.63E-03	-1.84E-04	-0.02	1.09E+04	NA
	2	4.02E-03	33.7	-0.31	0	1.33	4.94E-03	1.24E-03	0.2	2.91E-03	-81.6
18	71	49.4	1250	-0.09	-0.08	-0.21	-1.69E-03	-1.97E-04	-0.01	1.06E+04	NA
	2	3.91E-03	34.6	-0.32	0	1.07	5.00E-03	1.03E-03	0.2	3.00E-03	-79.2
18	72	33.3	0	0	0	0					NA
	2	2.59E-03	44.2	0	0	0			0	4.67E-03	
19	1	33.3	0	0	0	0					NA
	2	2.59E-03	44.2	0	0	0			0	4.67E-03	
19	2	34.7	1251	0.45	-0.03	0.09					NA
	2	2.76E-03	32	-0.11	0	0.82					83.6
19	3	36	1251	0.49	-0.01	0.18	1.33E-02	2.50E-04	0.09	7.30E+03	0.2
	2	2.78E-03	46.8	-0.05	0.02	0.9	1.14E-02	1.22E-03	0.2	4.36E-03	78.4
19	4	38.7	0	0	0	0					NA
	2	2.98E-03	48	0	0	0			0	4.08E-03	
20	1	38.7	0	0	0	0					NA
	2	2.98E-03	48	0	0	0			0	4.08E-03	
20	2	41.3	2977	4.23	1.11	-0.07	1.78E-02	-1.39E-05	0.25	1.97E+04	17.9
	2	3.17E-03	50	1.96	0.38	0.43	6.79E-03	9.02E-05	0.47	3.84E-03	98.7
20	3	44	0	0	0	0					NA

run	point n [~]	p [mbar] rho [lb/ft3]	RPM [~] T [F]	T [lb] Q [ft-lb]	P [hp] Pi [hp]	Mx [in-lb] My [in-lb]	CT [~] CP [~]	CMx [~] CMy [~]	FM [~] Mtip [~]	Re.75 [~] nu [ft2/s]	V [ft/s] phi [deg]
	2	3.37E-03	51.6	0	0	0			0	3.62E-03	
21	1	44	0	0	0	0					NA
	2	3.37E-03	51.6	0	0	0			0	3.62E-03	
21	2	47.3	2089	2.09	0.34	0.01	1.57E-02	3.80E-06	0.19	1.57E+04	14.7
	2	3.61E-03	53.1	0.84	0.12	0.75	7.12E-03	2.80E-04	0.33	3.38E-03	89.2
21	3	48	2483	3.12	0.58	0.15	1.64E-02	3.90E-05	0.24	1.89E+04	18.7
	2	3.66E-03	53.6	1.23	0.22	1.34	6.18E-03	3.50E-04	0.39	3.34E-03	83.6
21	4	49.3	2779	4.39	0.87	-0.35	1.79E-02	-7.16E-05	0.29	2.17E+04	20.8
	2	3.76E-03	54.3	1.65	0.37	1.21	5.82E-03	2.44E-04	0.44	3.26E-03	106.3
21	5	50.7	2977	5.52	1.26	-0.01	1.91E-02	-1.05E-06	0.3	2.38E+04	22.7
	2	3.85E-03	54.9	2.22	0.51	1.53	6.14E-03	2.63E-04	0.47	3.18E-03	90.2
21	6	52	2977	5.73	1.14	-0.01	1.93E-02	-1.92E-06	0.34	2.44E+04	22
	2	3.95E-03	55.4	2.01	0.54	1.65	5.55E-03	2.76E-04	0.47	3.10E-03	90.4
21	7	53.3	2779	5.1	0.94	-0.19	1.93E-02	-3.67E-05	0.33	2.33E+04	20.4
	2	4.05E-03	56.3	1.78	0.44	1.81	5.70E-03	3.40E-04	0.44	3.03E-03	96.2
21	8	55.3	2483	4.04	0.67	0.14	1.85E-02	3.10E-05	0.3	2.16E+04	17.8
	2	4.19E-03	56.8	1.42	0.31	1.86	5.91E-03	4.24E-04	0.39	2.93E-03	85.8
21	9	56.7	2088	2.79	0.4	0.12	1.76E-02	3.70E-05	0.25	1.86E+04	13.7
	2	4.29E-03	57.3	1.01	0.17	1.66	6.61E-03	5.22E-04	0.33	2.86E-03	85.9
21	10	61.3	0	0	0	0					NA
	2	4.64E-03	58.2	0	0	0			0	2.65E-03	
22	1	110.6	0	0	0	0					NA
	2	8.28E-03	63.2	0	0	0			0	1.49E-03	
22	2	115.2	2089	5.94	0.79	-0.94	1.86E-02	-1.46E-04	0.35	3.74E+04	17.3
	2	8.63E-03	62.7	1.98	0.38	3.29	5.10E-03	5.14E-04	0.33	1.42E-03	105.9

run	point	p [mbar]	RPM [~]	T [lb]	P [hp]	Mx [in-lb]	CT [~]	CMx [~]	FM [~]	Re.75 [~]	V [ft/s]
	n [~]	rho [lb/ft3]	T [F]	Q [ft-lb]	Pi [hp]	My [in-lb]	CP [~]	CMy [~]	Mtip [~]	nu [ft2/s]	phi [deg]
22	3	116.6	2485	8.88	1.37	-1.81	1.95E-02	-1.97E-04	0.4	4.50E+04	21.2
	2	8.74E-03	62.7	2.89	0.69	4.22	4.75E-03	4.60E-04	0.39	1.40E-03	113.2
22	4	118.4	2781	11.8	1.97	-3.31	2.03E-02	-2.83E-04	0.45	5.11E+04	23.8
	2	8.87E-03	62.6	3.73	1.06	5.51	4.60E-03	4.72E-04	0.44	1.38E-03	121
22	5	119.7	2977	13.73	2.46	-3.45	2.04E-02	-2.55E-04	0.46	5.53E+04	25
	2	8.97E-03	62.7	4.34	1.32	6.3	4.51E-03	4.65E-04	0.47	1.37E-03	118.7
22	6	120.6	2977	13.89	2.49	-3.46	2.05E-02	-2.54E-04	0.46	5.58E+04	24.8
	2	9.04E-03	62.7	4.39	1.34	6.1	4.52E-03	4.48E-04	0.47	1.36E-03	119.5
22	7	122	2778	11.96	2.01	-2.55	2.01E-02	-2.12E-04	0.44	5.26E+04	23.5
	2	9.14E-03	62.8	3.81	1.06	6.12	4.55E-03	5.10E-04	0.44	1.34E-03	112.6
22	8	123.3	2483	9.39	1.44	-1.68	1.95E-02	-1.73E-04	0.41	4.75E+04	21
	2	9.24E-03	62.9	3.04	0.73	4.8	4.69E-03	4.96E-04	0.39	1.33E-03	109.3
22	9	124.9	2088	6.29	0.84	-0.82	1.82E-02	-1.18E-04	0.35	4.05E+04	16.8
	2	9.35E-03	63	2.12	0.4	3.39	4.97E-03	4.88E-04	0.33	1.31E-03	103.6
22	10	128.8	0	0	0	0					NA
	2	9.64E-03	63.2	0	0	0			0	1.27E-03	
23	1	135.2	0	-0.07	0	-0.48					29.5
	2	1.01E-02	63.4	0	0	-0.05			0	1.21E-03	5.5
23	2	140.2	2088	6.48	0.91	-4.07	1.67E-02	-5.23E-04	0.33	4.54E+04	25.7
	2	1.05E-02	63.7	2.28	0.39	10.96	4.67E-03	1.41E-03	0.33	1.17E-03	110.4
23	3	142.4	2483	10.1	1.59	-3.5	1.82E-02	-3.13E-04	0.39	5.48E+04	25.6
	2	1.07E-02	63.8	3.36	0.76	11.95	4.41E-03	1.07E-03	0.39	1.15E-03	106.3
23	4	144.7	2781	13.87	2.33	-3.51	1.96E-02	-2.47E-04	0.45	6.24E+04	26.2
	2	1.08E-02	63.9	4.39	1.22	13.42	4.33E-03	9.42E-04	0.44	1.13E-03	104.7
23	5	146.5	2977	16.54	2.99	-3.94	2.01E-02	-2.38E-04	0.46	6.76E+04	26.7
	2	1.09E-02	64	5.27	1.58	14.36	4.37E-03	8.69E-04	0.47	1.12E-03	105.3

run	point	p [mbar]	RPM [~]	T [lb]	P [hp]	Mx [in-lb]	CT [~]	CMx [~]	FM [~]	Re.75 [~]	V [ft/s]
	n [~]	rho [lb/ft3]	T [F]	Q [ft-lb]	Pi [hp]	My [in-lb]	CP [~]	CMy [~]	Mtip [~]	nu [ft2/s]	phi [deg]
23	6	147.6	2977	16.76	2.99	-4.08	2.03E-02	-2.45E-04	0.47	6.81E+04	26
	2	1.10E-02	64.1	5.27	1.6	14.48	4.34E-03	8.70E-04	0.47	1.11E-03	105.7
23	7	149.5	2779	14.37	2.41	-3.38	1.97E-02	-2.30E-04	0.45	6.43E+04	21.9
	2	1.12E-02	64.2	4.56	1.27	13.73	4.34E-03	9.35E-04	0.43	1.10E-03	103.8
23	8	151.2	2482	10.95	1.69	-3.05	1.86E-02	-2.58E-04	0.41	5.81E+04	17.8
	2	1.13E-02	64.3	3.58	0.84	11.74	4.39E-03	9.91E-04	0.39	1.09E-03	104.6
23	9	152.9	2088	7.27	0.99	-2.87	1.73E-02	-3.39E-04	0.35	4.94E+04	13.1
	2	1.14E-02	64.4	2.48	0.45	10.63	4.58E-03	1.25E-03	0.33	1.08E-03	105.1
23	10	157.1	0	0	0	0					NA
	2	1.17E-02	64.6	0	0	0			0	1.05E-03	
24	1	159.1	0	0	0	0					NA
	2	1.19E-02	64.7	0	0	0			0	1.03E-03	
24	2	238.6	2976	30.78	5.22	-6.26	2.31E-02	-2.34E-04	0.56		49
	2	1.78E-02	66	9.22	3.14	16.28	4.47E-03	6.08E-04	0.46		111
24	3	199.2	2976	25.49	4.53	-5.57	2.29E-02	-2.49E-04	0.52		35.8
	2	1.49E-02	64.6	7.99	2.59	13.7	4.68E-03	6.11E-04	0.47		112.1
24	4	184	2976	23.58	4.07	-5.06	2.28E-02	-2.44E-04	0.53		38.1
	2	1.38E-02	63.3	7.18	2.39	12.49	4.58E-03	6.02E-04	0.47		112
24	5	172	2976	21.93	3.78	-5.78	2.27E-02	-2.97E-04	0.53		42
	2	1.29E-02	61.9	6.67	2.22	11.7	4.58E-03	6.01E-04	0.47		116.3
24	6	164.5	2977	19.57	3.4	-5.23	2.10E-02	-2.79E-04	0.5		44.5
	2	1.24E-02	59.4	6	1.91	10.05	4.33E-03	5.37E-04	0.47		117.5
24	7	145	2977	18.17	3.16	-5	2.21E-02	-3.02E-04	0.51		48.2
	2	1.10E-02	57.9	5.57	1.81	8.95	4.59E-03	5.41E-04	0.47		119.2
24	8	135	2977	17	2.97	-4.9	2.21E-02	-3.17E-04	0.5		50.4
	2	1.02E-02	56.3	5.23	1.7	7.8	4.65E-03	5.05E-04	0.47		122.1

run	point	p [mbar]	RPM [~]	T [lb]	P [hp]	Mx [in-lb]	CT [~]	CMx [~]	FM [~]	Re.75 [~]	V [ft/s]
	n [~]	rho [lb/ft3]	T [F]	Q [ft-lb]	Pi [hp]	My [in-lb]	CP [~]	CMy [~]	Mtip [~]	nu [ft2/s]	phi [deg]
24	9	126.5	2977	15.63	2.75	-4.67	2.17E-02	-3.22E-04	0.49		53.4
	2	9.62E-03	54.9	4.86	1.55	7.76	4.63E-03	5.35E-04	0.47		121.1
24	10	101.5	0	0	0	0					NA
	2	7.79E-03	50.2	0	0	0			0		
25	1	101.5	0	0	0	0					NA
	2	7.79E-03	50.2	0	0	0			0		
25	2	40	2979	4.49	0.98	-0.34	1.92E-02	-7.28E-05	0.3		NA
	2	3.10E-03	44.6	1.73	0.42	1.78	6.34E-03	3.79E-04	0.48		100.9
25	3	32	2980	2.7	0.66	-0.46	1.44E-02	-1.22E-04	0.2	1.58E+04	NA
	2	2.49E-03	43.3	1.17	0.22	0.64	6.10E-03	1.70E-04	0.48	4.79E-03	125.6
25	4	25.3	2980	1.92	0.5	-0.3	1.30E-02	-1.00E-04	0.16	1.25E+04	NA
	2	1.97E-03	42.5	0.88	0.15	0.37	6.54E-03	1.25E-04	0.48	6.05E-03	128.8
25	5	17.3	2980	1.17	0.31	-0.23	1.15E-02	-1.15E-04	0.11	8.56E+03	NA
	2	1.35E-03	41.8	0.55	0.08	-0.32	7.62E-03	-1.57E-04	0.48	8.86E-03	-126.1
25	6	14.7	2981	0.91	0.25	-0.05	1.06E-02	-2.82E-05	0.09	7.23E+03	NA
	2	1.14E-03	41.8	0.44	0.06	-0.4	8.23E-03	-2.31E-04	0.48	1.05E-02	-97
25	7	12.7	2981	0.7	0.2	0.11	9.38E-03	7.21E-05	0.07	6.22E+03	NA
	2	9.88E-04	42.1	0.36	0.05	-0.68	8.87E-03	-4.58E-04	0.48	1.22E-02	-81.1
25	8	11.3	2981	0.6	0.21	0.26	9.01E-03	1.93E-04	0.06	5.54E+03	NA
	2	8.83E-04	42.5	0.37	0.04	-0.82	1.01E-02	-6.17E-04	0.48	1.37E-02	-72.6
25	9	10	2981	0.54	0.13	0.45	9.16E-03	3.85E-04	0.06	4.87E+03	119
	2	7.80E-04	42.5	0.23	0.03	-0.88	9.95E-03	-7.49E-04	0.48	1.56E-02	-62.8
25	10	9.3	2981	0.49	0.11	0.52	8.91E-03	4.69E-04	0.06	4.53E+03	213.9
	2	7.27E-04	42.5	0.2	0.03	-0.75	1.03E-02	-6.86E-04	0.48	1.67E-02	-55.6
25	11	9.3	2981	0.51	0.17	0.63	9.34E-03	5.80E-04	0.06	4.47E+03	219.4
	2	7.21E-04	46.9	0.29	0.03	-0.7	1.15E-02	-6.45E-04	0.47	1.70E-02	-48

run	point	p [mbar]	RPM [~]	T [lb]	P [hp]	Mx [in-lb]	CT [~]	CMx [~]	FM [~]	Re.75 [~]	V [ft/s]
	n [~]	rho [lb/ft3]	T [F]	Q [ft-lb]	Pi [hp]	My [in-lb]	CP [~]	CMy [~]	Mtip [~]	nu [ft2/s]	phi [deg]
25	12	9	2981	0.47	0.1	0.79	9.02E-03	7.51E-04	0.06	4.31E+03	208.3
	2	6.96E-04	46.8	0.17	0.03	-0.51	1.05E-02	-4.81E-04	0.47	1.76E-02	-32.6
25	13	8.7	2981	0.48	0.09	0.87	9.56E-03	8.58E-04	0.06	4.14E+03	199.3
	2	6.69E-04	47.1	0.15	0.03	-0.4	1.07E-02	-3.97E-04	0.47	1.83E-02	-24.8
25	14	8.7	2981	0.48	0.08	0.82	9.59E-03	8.14E-04	0.06	4.14E+03	183.7
	2	6.69E-04	47.7	0.14	0.03	-0.41	1.05E-02	-4.08E-04	0.47	1.83E-02	-26.6
25	15	8.3	2982	0.51	0.07	0.78	1.06E-02	8.01E-04	0.07	3.97E+03	169.8
	2	6.42E-04	48.3	0.13	0.04	-0.4	1.09E-02	-4.15E-04	0.47	1.91E-02	-27.4
25	16	8.3	2982	0.56	0.07	0.78	1.16E-02	8.03E-04	0.08	3.96E+03	144.5
	2	6.41E-04	49	0.12	0.04	-0.31	1.08E-02	-3.16E-04	0.47	1.92E-02	-21.5
25	17	8.3	2982	0.61	0.07	0.68	1.28E-02	7.09E-04	0.09	3.92E+03	113.1
	2	6.35E-04	49.8	0.13	0.05	-0.31	1.09E-02	-3.24E-04	0.47	1.93E-02	-24.6
25	18	8.3	2982	0.64	0.07	0.7	1.35E-02	7.25E-04	0.1	3.92E+03	87.3
	2	6.34E-04	50.3	0.12	0.05	-0.24	1.09E-02	-2.51E-04	0.47	1.94E-02	-19.1
25	19	8.3	0	0	0	0					NA
	2	6.33E-04	51.2	0	0	0			0	1.94E-02	
26	1	8.3	0	0	0	0					NA
	2	6.33E-04	51.2	0	0	0			0	1.94E-02	
26	2	8.3	2978	0.27	0.06	0.29	5.71E-03	3.09E-04	0.03	3.91E+03	5
	2	6.32E-04	52	0.11	0.01	-0.1	1.09E-02	-1.04E-04	0.47	1.94E-02	-18.6
26	3	8.3	2978	0.33	0.06	0.39	6.92E-03	4.12E-04	0.04	3.90E+03	14.7
	2	6.32E-04	52.4	0.11	0.02	-0.12	1.08E-02	-1.27E-04	0.47	1.94E-02	-17.1
26	4	8.3	2978	0.37	0.07	0.55	7.76E-03	5.80E-04	0.04	3.90E+03	NA
	2	6.31E-04	52.8	0.12	0.02	-0.08	1.09E-02	-7.90E-05	0.47	1.94E-02	-7.8
26	5	8.3	0	0	0	0					NA
	2	6.31E-04	53.4	0	0	0			0	1.94E-02	

run	point n [~]	p [mbar] rho [lb/ft3]	RPM [~] T [F]	T [lb] Q [ft-lb]	P [hp] Pi [hp]	Mx [in-lb] My [in-lb]	CT [~] CP [~]	CMx [~] CMy [~]	FM [~] Mtip [~]	Re.75 [~] nu [ft2/s]	V [ft/s] phi [deg]
27	1	8.3	0	0	0	0					NA
	2	6.31E-04	53.4	0	0	0			0	1.94E-02	
27	2	10.9	2089	0.39	0.04	0.5	1.28E-02	8.15E-04	0.06		NA
	2	8.30E-04	55.8	0.11	0.02	0.47	1.67E-02	7.62E-04	0.33		43.1
27	3	11.7	2483	0.57	0.1	0.63	1.22E-02	6.78E-04	0.08		NA
	2	8.90E-04	56.1	0.22	0.04	0.48	1.25E-02	5.14E-04	0.39		37.2
27	4	12.3	2483	0.63	0.12	0.74	1.29E-02	7.54E-04	0.08	4.74E+03	NA
	2	9.30E-04	56.5	0.24	0.04	0.53	1.22E-02	5.44E-04	0.39	1.33E-02	35.8
27	5	13.3	2780	0.88	0.19	0.83	1.33E-02	6.22E-04	0.11	5.77E+03	NA
	2	1.01E-03	56.8	0.37	0.06	0.73	1.01E-02	5.52E-04	0.44	1.23E-02	41.6
27	6	13.7	2976	1.12	0.27	0.95	1.44E-02	6.07E-04	0.13	6.35E+03	70.3
	2	1.04E-03	57	0.48	0.09	0.35	9.39E-03	2.26E-04	0.47	1.19E-02	20.4
27	7	14.7	2779	1.13	0.23	0.99	1.56E-02	6.80E-04	0.14	6.33E+03	33.5
	2	1.11E-03	57.5	0.43	0.09	0.66	9.72E-03	4.52E-04	0.44	1.12E-02	33.6
27	8	15.9	2483	0.92	0.16	1.01	1.46E-02	8.06E-04	0.12	6.12E+03	NA
	2	1.20E-03	57.8	0.34	0.06	0.39	1.04E-02	3.09E-04	0.39	1.03E-02	21
27	9	16.8	2089	0.66	0.09	1.06	1.40E-02	1.12E-03	0.09	5.45E+03	NA
	2	1.27E-03	58.1	0.23	0.04	0.59	1.25E-02	6.23E-04	0.33	9.76E-03	29
27	10	18.8	0	0	0	0					NA
	2	1.42E-03	58.7	0	0	0			0	8.72E-03	
28	1	18.8	0	0	0	0					NA
	2	1.42E-03	58.7	0	0	0			0	8.72E-03	
28	2	21.3	2089	0.79	0.13	0.28	1.34E-02	2.34E-04	0.1	6.91E+03	NA
	2	1.61E-03	59.3	0.33	0.04	0.47	1.08E-02	3.94E-04	0.33	7.70E-03	59.3
28	3	22.7	2484	1.17	0.25	0.51	1.31E-02	2.86E-04	0.12	8.73E+03	NA

run	point	p [mbar]	RPM [~]	T [lb]	P [hp]	Mx [in-lb]	CT [~]	CMx [~]	FM [~]	Re.75 [~]	V [ft/s]
	n [~]	rho [lb/ft3]	T [F]	Q [ft-lb]	Pi [hp]	My [in-lb]	CP [~]	CMy [~]	Mtip [~]	nu [ft2/s]	phi [deg]
	2	1.71E-03	59.6	0.53	0.07	0.57	8.58E-03	3.19E-04	0.39	7.24E-03	48
28	4	24	2780	1.79	0.41	0.43	1.52E-02	1.80E-04	0.17	1.03E+04	NA
	2	1.81E-03	60	0.77	0.14	0.74	7.65E-03	3.11E-04	0.44	6.85E-03	59.9
28	5	25.1	2978	2.2	0.53	0.46	1.55E-02	1.60E-04	0.19	1.16E+04	NA
	2	1.89E-03	60.2	0.93	0.18	0.48	7.08E-03	1.67E-04	0.47	6.56E-03	46.2
28	6	26.1	2779	1.88	0.43	0.68	1.46E-02	2.62E-04	0.17	1.12E+04	NA
	2	1.97E-03	60.5	0.82	0.14	1.03	7.28E-03	3.98E-04	0.44	6.29E-03	56.7
28	7	26.8	2484	1.5	0.31	0.68	1.43E-02	3.22E-04	0.15	1.03E+04	NA
	2	2.02E-03	60.7	0.66	0.1	0.63	7.97E-03	2.98E-04	0.39	6.14E-03	42.8
28	8	28	2088	1.02	0.18	0.78	1.31E-02	4.97E-04	0.12	9.03E+03	NA
	2	2.11E-03	61	0.45	0.05	0.86	9.20E-03	5.50E-04	0.33	5.89E-03	47.9
28	9	30.4	0	0	0	0					NA
	2	2.28E-03	61.4	0	0	0			0	5.42E-03	
29	1	30.4	0	0	0	0					NA
	2	2.28E-03	61.4	0	0	0			0	5.42E-03	
29	2	33.2	2090	1.27	0.21	0.33	1.37E-02	1.80E-04	0.14	1.07E+04	10.5
	2	2.49E-03	61.8	0.54	0.07	0.58	8.32E-03	3.11E-04	0.33	4.97E-03	60
29	3	34	2485	1.86	0.39	0.4	1.40E-02	1.48E-04	0.17	1.30E+04	13
	2	2.55E-03	62	0.83	0.12	0.87	7.05E-03	3.26E-04	0.39	4.85E-03	65.5
29	4	34.7	2780	2.51	0.58	0.47	1.47E-02	1.36E-04	0.19	1.49E+04	16.2
	2	2.60E-03	62.1	1.1	0.19	1.57	6.49E-03	4.60E-04	0.44	4.76E-03	73.5
29	5	35.7	2978	3.1	0.75	0.25	1.54E-02	6.19E-05	0.22	1.64E+04	17.9
	2	2.68E-03	62.3	1.32	0.26	0.99	6.15E-03	2.45E-04	0.47	4.62E-03	75.8
29	6	36.7	2779	2.8	0.61	0.36	1.56E-02	9.94E-05	0.22	1.57E+04	15.8
	2	2.75E-03	62.4	1.15	0.22	1.32	6.32E-03	3.67E-04	0.44	4.50E-03	74.8
29	7	37.3	2484	2.2	0.43	0.31	1.51E-02	1.06E-04	0.19	1.43E+04	14.6

run	point n [~]	p [mbar] rho [lb/ft3]	RPM [~] T [F]	T [lb] Q [ft-lb]	P [hp] Pi [hp]	Mx [in-lb] My [in-lb]	CT [~] CP [~]	CMx [~] CMy [~]	FM [~] Mtip [~]	Re.75 [~] nu [ft2/s]	V [ft/s] phi [deg]
	2	2.80E-03	62.6	0.92	0.15	0.82	6.81E-03	2.78E-04	0.39	4.43E-03	69.2
29	8	38.4	2089	1.46	0.25	0.53	1.37E-02	2.48E-04	0.15	1.24E+04	11.5
	2	2.88E-03	62.7	0.62	0.08	1.03	7.70E-03	4.83E-04	0.33	4.30E-03	62.8
29	9	40.7	0	0	0	0					NA
	2	3.05E-03	63.1	0	0	0			0	4.07E-03	
30	1	40.7	0	0	0	0					NA
	2	3.05E-03	63.1	0	0	0			0	4.07E-03	
30	2	42.7	2089	1.82	0.28	0.34	1.54E-02	1.42E-04	0.18	1.37E+04	11.6
	2	3.19E-03	63.3	0.7	0.11	0.87	7.34E-03	3.67E-04	0.33	3.88E-03	68.8
30	3	43.3	2484	2.72	0.51	0.22	1.60E-02	6.35E-05	0.22	1.66E+04	15.1
	2	3.24E-03	63.4	1.08	0.19	1.12	6.46E-03	3.29E-04	0.39	3.82E-03	79.1
30	4	44.1	2779	3.55	0.75	0.17	1.65E-02	3.82E-05	0.25	1.89E+04	18.6
	2	3.30E-03	63.5	1.42	0.29	1.74	5.99E-03	4.02E-04	0.44	3.75E-03	84.6
30	5	45.1	2977	4.36	0.96	-0.23	1.73E-02	-4.55E-05	0.28	2.06E+04	20.7
	2	3.37E-03	63.6	1.69	0.39	1.28	5.76E-03	2.52E-04	0.47	3.67E-03	100.2
30	6	45.9	2779	3.85	0.79	0	1.72E-02	-2.72E-07	0.27	1.96E+04	18.8
	2	3.43E-03	63.7	1.48	0.32	1.65	5.94E-03	3.66E-04	0.44	3.61E-03	90
30	7	46.7	2484	3	0.56	0.18	1.65E-02	4.92E-05	0.24	1.78E+04	16.6
	2	3.49E-03	63.7	1.18	0.22	1.13	6.32E-03	3.09E-04	0.39	3.55E-03	81
30	8	47.6	2089	2.02	0.32	0.32	1.54E-02	1.20E-04	0.19	1.53E+04	13.1
	2	3.56E-03	63.8	0.82	0.12	1.2	7.11E-03	4.53E-04	0.33	3.48E-03	75.1
30	9	49.3	0	0	0	0					NA
	2	3.69E-03	64	0	0	0			0	3.36E-03	
31	1	49.3	0	0	0	0					NA
	2	3.69E-03	64	0	0	0			0	3.36E-03	

run	point	p [mbar]	RPM [~]	T [lb]	P [hp]	Mx [in-lb]	CT [~]	CMx [~]	FM [~]	Re.75 [~]	V [ft/s]
	n [~]	rho [lb/ft3]	T [F]	Q [ft-lb]	Pi [hp]	My [in-lb]	CP [~]	CMy [~]	Mtip [~]	nu [ft2/s]	phi [deg]
31	2	51.9	2090	2.24	0.36	0.37	1.56E-02	1.30E-04	0.2	1.67E+04	12.8
	2	3.88E-03	64.1	0.9	0.13	1.51	6.86E-03	5.25E-04	0.33	3.19E-03	76.1
31	3	53.2	2485	3.35	0.64	0.22	1.61E-02	5.35E-05	0.24	2.03E+04	16.3
	2	3.97E-03	64.2	1.36	0.24	1.67	6.07E-03	3.99E-04	0.39	3.11E-03	82.4
31	4	54.1	2779	4.54	0.97	0.1	1.72E-02	1.81E-05	0.27	2.31E+04	19.8
	2	4.04E-03	64.3	1.82	0.37	2.4	5.81E-03	4.51E-04	0.43	3.06E-03	87.7
31	5	54.9	2977	5.47	1.19	-0.15	1.78E-02	-2.42E-05	0.3	2.51E+04	21.6
	2	4.10E-03	64.4	2.11	0.49	1.83	5.54E-03	2.96E-04	0.47	3.02E-03	94.7
31	6	56.4	2779	5	1.01	-0.24	1.82E-02	-4.42E-05	0.3	2.41E+04	19.9
	2	4.21E-03	64.5	1.91	0.42	2.14	5.77E-03	3.87E-04	0.43	2.94E-03	96.5
31	7	57.5	2484	3.87	0.7	0	1.73E-02	2.61E-07	0.27	2.19E+04	17.1
	2	4.29E-03	64.6	1.48	0.28	1.52	5.95E-03	3.38E-04	0.39	2.88E-03	90
31	8	58.8	2088	2.46	0.41	0.41	1.52E-02	1.27E-04	0.2	1.89E+04	12.9
	2	4.39E-03	64.7	1.02	0.14	1.94	6.51E-03	5.96E-04	0.33	2.82E-03	78
31	9	60.9	0	0	0	0					NA
	2	4.55E-03	64.8	0	0	0			0	2.72E-03	
32	1	60.9	0	0	0	0					NA
	2	4.55E-03	64.8	0	0	0			0	2.72E-03	
32	2	63.3	2089	2.87	0.44	0.26	1.65E-02	7.47E-05	0.23	2.03E+04	13.8
	2	4.73E-03	64.9	1.11	0.17	1.55	6.36E-03	4.41E-04	0.33	2.62E-03	80.4
32	3	64.4	2483	4.36	0.79	-0.13	1.74E-02	-2.65E-05	0.28	2.46E+04	17.7
	2	4.81E-03	64.9	1.67	0.32	1.94	5.75E-03	3.86E-04	0.39	2.57E-03	93.9
32	4	65.6	2779	5.82	1.15	-0.47	1.82E-02	-7.34E-05	0.32	2.80E+04	20.4
	2	4.89E-03	65	2.17	0.49	2.6	5.45E-03	4.05E-04	0.43	2.53E-03	100.3
32	5	66.7	2976	6.84	1.44	-0.61	1.84E-02	-8.19E-05	0.33	3.05E+04	22.7
	2	4.97E-03	65	2.54	0.62	2.56	5.26E-03	3.42E-04	0.47	2.49E-03	103.5

run	point	p [mbar]	RPM [~]	T [lb]	P [hp]	Mx [in-lb]	CT [~]	CMx [~]	FM [~]	Re.75 [~]	V [ft/s]
	n [~]	rho [lb/ft3]	T [F]	Q [ft-lb]	Pi [hp]	My [in-lb]	CP [~]	CMy [~]	Mtip [~]	nu [ft2/s]	phi [deg]
32	6	67.7	2779	6.05	1.18	-0.58	1.83E-02	-8.70E-05	0.33	2.89E+04	20.6
	2	5.05E-03	65.1	2.23	0.51	2.66	5.37E-03	4.01E-04	0.43	2.45E-03	102.2
32	7	68.9	2482	4.65	0.84	-0.11	1.74E-02	-2.01E-05	0.29	2.63E+04	18.2
	2	5.14E-03	65.1	1.77	0.34	2.22	5.60E-03	4.11E-04	0.39	2.40E-03	92.8
32	8	70	2090	3.16	0.49	0.06	1.64E-02	1.55E-05	0.24	2.25E+04	14.6
	2	5.22E-03	65.2	1.23	0.19	1.85	6.11E-03	4.77E-04	0.33	2.37E-03	88.1
32	9	72.1	0	0	0	0					NA
	2	5.38E-03	65.3	0	0	0			0	2.30E-03	
33	1	72.1	0	0	0	0					NA
	2	5.38E-03	65.3	0	0	0			0	2.30E-03	
33	2	74.3	2089	3.41	0.52	0.18	1.67E-02	4.47E-05	0.25	2.38E+04	14.7
	2	5.54E-03	65.3	1.31	0.21	1.85	6.01E-03	4.50E-04	0.33	2.23E-03	84.3
33	3	75.3	2484	5.11	0.92	-0.35	1.74E-02	-5.94E-05	0.3	2.87E+04	18.7
	2	5.62E-03	65.4	1.95	0.38	2.52	5.49E-03	4.28E-04	0.39	2.20E-03	97.9
33	4	76.3	2779	6.94	1.34	-0.96	1.87E-02	-1.29E-04	0.34	3.25E+04	21.5
	2	5.69E-03	65.4	2.53	0.59	2.93	5.26E-03	3.93E-04	0.43	2.17E-03	108.1
33	5	77.3	2979	8.2	1.71	-1.17	1.89E-02	-1.34E-04	0.36	3.54E+04	23.4
	2	5.76E-03	65.4	3.01	0.76	3.04	5.18E-03	3.49E-04	0.47	2.14E-03	111
33	6	78.4	2779	7.11	1.36	-1.14	1.86E-02	-1.49E-04	0.35	3.34E+04	21.9
	2	5.84E-03	65.5	2.58	0.61	3.57	5.20E-03	4.65E-04	0.43	2.12E-03	107.8
33	7	79.5	2483	5.42	0.97	-0.41	1.76E-02	-6.66E-05	0.3	3.03E+04	19
	2	5.92E-03	65.5	2.06	0.4	2.55	5.43E-03	4.11E-04	0.39	2.09E-03	99.2
33	8	80.3	2088	3.6	0.56	0.1	1.63E-02	2.24E-05	0.25	2.57E+04	15.1
	2	5.98E-03	65.6	1.42	0.22	2.15	5.85E-03	4.85E-04	0.33	2.07E-03	87.3
33	9	83.3	0	0	0	0					NA
	2	6.21E-03	65.6	0	0	0			0	1.99E-03	

run	point n [~]	p [mbar] rho [lb/ft3]	RPM [~] T [F]	T [lb] Q [ft-lb]	P [hp] Pi [hp]	Mx [in-lb] My [in-lb]	CT [~] CP [~]	CMx [~] CMy [~]	FM [~] Mtip [~]	Re.75 [~] nu [ft2/s]	V [ft/s] phi [deg]
34	1	83.3	0	0	0	0					NA
	2	6.21E-03	65.6	0	0	0			0	1.99E-03	
34	2	85.3	2090	3.92	0.6	-0.04	1.67E-02	-8.51E-06	0.27	2.74E+04	15.2
	2	6.36E-03	65.7	1.51	0.24	1.98	5.73E-03	4.20E-04	0.33	1.94E-03	91.2
34	3	86.8	2483	6	1.07	-0.57	1.78E-02	-8.41E-05	0.31	3.31E+04	19.2
	2	6.47E-03	65.7	2.27	0.45	2.84	5.34E-03	4.19E-04	0.39	1.91E-03	101.3
34	4	88	2780	8.03	1.54	-1.17	1.87E-02	-1.35E-04	0.36	3.76E+04	21.8
	2	6.56E-03	65.7	2.91	0.69	3.88	5.09E-03	4.50E-04	0.43	1.88E-03	106.8
34	5	89.1	2977	9.58	1.95	-1.72	1.93E-02	-1.71E-04	0.38	4.07E+04	24.3
	2	6.64E-03	65.8	3.43	0.89	3.95	5.01E-03	3.95E-04	0.47	1.86E-03	113.5
34	6	90.4	2779	8.42	1.58	-1.34	1.91E-02	-1.51E-04	0.37	3.86E+04	22.3
	2	6.73E-03	65.8	2.98	0.73	4.17	5.06E-03	4.71E-04	0.43	1.83E-03	107.8
34	7	91.7	2483	6.45	1.13	-0.62	1.81E-02	-8.63E-05	0.33	3.50E+04	19.4
	2	6.83E-03	65.9	2.39	0.49	3.06	5.25E-03	4.26E-04	0.39	1.81E-03	101.4
34	8	92.7	2088	4.36	0.65	-0.24	1.71E-02	-4.65E-05	0.28	2.97E+04	15.4
	2	6.90E-03	65.9	1.64	0.27	2.13	5.61E-03	4.16E-04	0.33	1.79E-03	96.4
34	9	95.1	0	0	0	0					NA
	2	7.08E-03	66	0	0	0			0	1.74E-03	
35	1	95.1	0	0	0	0					NA
	2	7.08E-03	66	0	0	0			0	1.74E-03	
35	2	97.5	2089	4.68	0.69	-0.03	1.75E-02	-5.20E-06	0.3	3.13E+04	15.8
	2	7.26E-03	66	1.73	0.29	2.77	5.51E-03	5.14E-04	0.33	1.70E-03	90.6
35	3	98.8	2483	7.04	1.22	-0.55	1.84E-02	-7.17E-05	0.34	3.77E+04	20
	2	7.36E-03	66.1	2.59	0.54	3.85	5.19E-03	4.98E-04	0.39	1.68E-03	98.2
35	4	100	2780	9.51	1.74	-1.79	1.95E-02	-1.83E-04	0.39	4.27E+04	22.9

run	point	p [mbar]	RPM [~]	T [lb]	P [hp]	Mx [in-lb]	CT [~]	CMx [~]	FM [~]	Re.75 [~]	V [ft/s]
	n [~]	rho [lb/ft3]	T [F]	Q [ft-lb]	Pi [hp]	My [in-lb]	CP [~]	CMy [~]	Mtip [~]	nu [ft2/s]	phi [deg]
	2	7.45E-03	66.1	3.28	0.83	4.8	4.94E-03	4.91E-04	0.43	1.66E-03	110.4
35	5	100.8	2978	11.22	2.16	-2.09	1.99E-02	-1.85E-04	0.41	4.61E+04	24.8
	2	7.50E-03	66.1	3.82	1.07	5.09	4.84E-03	4.50E-04	0.47	1.64E-03	112.3
35	6	105.7	2780	9.89	1.79	-1.76	1.92E-02	-1.70E-04	0.39	4.51E+04	22.7
	2	7.87E-03	66.2	3.38	0.86	4.94	4.79E-03	4.78E-04	0.43	1.57E-03	109.6
35	7	106.7	2482	7.51	1.27	-0.7	1.81E-02	-8.38E-05	0.35	4.07E+04	19.4
	2	7.94E-03	66.3	2.69	0.57	3.69	4.95E-03	4.43E-04	0.39	1.55E-03	100.7
35	8	107.6	2088	5.05	0.73	0.13	1.71E-02	2.26E-05	0.3	3.45E+04	15.5
	2	8.01E-03	66.3	1.85	0.31	3.1	5.25E-03	5.23E-04	0.33	1.54E-03	87.5
35	9	109.5	0	0	0	0					NA
	2	8.15E-03	66.4	0	0	0			0	1.51E-03	
36	1	109.5	0	0	0	0					NA
	2	8.15E-03	66.4	0	0	0			0	1.51E-03	
36	2	111.9	2089	5.27	0.77	-0.02	1.71E-02	-3.08E-06	0.31	3.59E+04	15.9
	2	8.33E-03	66.4	1.93	0.33	3.42	5.20E-03	5.53E-04	0.33	1.48E-03	90.3
36	3	112.8	2484	7.94	1.34	-0.8	1.81E-02	-9.10E-05	0.35	4.30E+04	19.6
	2	8.39E-03	66.4	2.84	0.6	4.23	4.88E-03	4.80E-04	0.39	1.47E-03	100.7
36	4	113.9	2779	10.66	1.93	-1.85	1.92E-02	-1.66E-04	0.4	4.86E+04	22.6
	2	8.48E-03	66.4	3.65	0.93	5.09	4.74E-03	4.56E-04	0.43	1.46E-03	110
36	5	115	2977	12.43	2.41	-2.12	1.94E-02	-1.64E-04	0.41	5.26E+04	24.9
	2	8.56E-03	66.4	4.26	1.16	5.62	4.65E-03	4.36E-04	0.46	1.44E-03	110.6
36	6	116	2779	10.91	1.97	-2.13	1.93E-02	-1.88E-04	0.4	4.95E+04	23.1
	2	8.63E-03	66.5	3.73	0.95	5.56	4.73E-03	4.90E-04	0.43	1.43E-03	111
36	7	117	2484	8.31	1.38	-0.87	1.83E-02	-9.57E-05	0.36	4.46E+04	20.1
	2	8.70E-03	66.5	2.92	0.63	4.38	4.82E-03	4.79E-04	0.39	1.42E-03	101.3
36	8	117.9	2088	5.59	0.82	-0.38	1.73E-02	-5.82E-05	0.31	3.78E+04	16

run	point n [~]	p [mbar] rho [lb/ft3]	RPM [~] T [F]	T [lb] Q [ft-lb]	P [hp] Pi [hp]	Mx [in-lb] My [in-lb]	CT [~] CP [~]	CMx [~] CMy [~]	FM [~] Mtip [~]	Re.75 [~] nu [ft2/s]	V [ft/s] phi [deg]
	2	8.77E-03	66.6	2.05	0.35	3.27	5.16E-03	5.03E-04	0.33	1.41E-03	96.6
36	9	119.8	0	0	0	0					NA
	2	8.91E-03	66.6	0	0	0			0	1.38E-03	
37	1	119.8	0	0	0	0					NA
	2	8.91E-03	66.6	0	0	0			0	1.38E-03	
37	2	122.9	2088	6	0.85	-0.61	1.78E-02	-8.95E-05	0.33	3.94E+04	16.4
	2	9.14E-03	66.6	2.15	0.38	3.59	5.12E-03	5.29E-04	0.33	1.35E-03	99.6
37	3	123.9	2482	8.94	1.48	-1.34	1.86E-02	-1.39E-04	0.37	4.72E+04	20.1
	2	9.22E-03	66.6	3.12	0.68	4.62	4.81E-03	4.78E-04	0.39	1.34E-03	106.2
37	4	124.9	2780	11.94	2.13	-2.46	1.97E-02	-2.02E-04	0.42	5.33E+04	23.3
	2	9.29E-03	66.7	4.02	1.05	5.85	4.68E-03	4.79E-04	0.43	1.33E-03	112.8
37	5	125.9	2977	13.88	2.64	-2.67	1.98E-02	-1.89E-04	0.43	5.76E+04	25.4
	2	9.36E-03	66.7	4.65	1.31	6.34	4.59E-03	4.49E-04	0.46	1.32E-03	112.8
37	6	126.9	2779	12.18	2.15	-2.29	1.97E-02	-1.84E-04	0.42	5.42E+04	23.4
	2	9.44E-03	66.7	4.06	1.07	6	4.65E-03	4.84E-04	0.43	1.31E-03	110.8
37	7	128	2483	9.27	1.52	-1.46	1.87E-02	-1.46E-04	0.38	4.88E+04	20.6
	2	9.52E-03	66.8	3.21	0.71	4.86	4.76E-03	4.87E-04	0.39	1.30E-03	106.7
37	8	129	2089	6.26	0.9	-0.58	1.77E-02	-8.19E-05	0.33	4.14E+04	16.5
	2	9.59E-03	66.8	2.25	0.39	3.36	5.06E-03	4.72E-04	0.33	1.29E-03	99.8
37	9	131	0	0	0	0					NA
	2	9.74E-03	66.9	0	0	0			0	1.27E-03	
38	1	131	0	0	0	0					NA
	2	9.74E-03	66.9	0	0	0			0	1.27E-03	
38	2	137.5	2087	6.93	0.96	-0.67	1.84E-02	-8.80E-05	0.35	4.41E+04	16.8
	2	1.02E-02	66.8	2.41	0.44	4.22	5.00E-03	5.57E-04	0.33	1.21E-03	99

run	point	p [mbar]	RPM [~]	T [lb]	P [hp]	Mx [in-lb]	CT [~]	CMx [~]	FM [~]	Re.75 [~]	V [ft/s]
	n [~]	rho [lb/ft3]	T [F]	Q [ft-lb]	Pi [hp]	My [in-lb]	CP [~]	CMy [~]	Mtip [~]	nu [ft2/s]	phi [deg]
38	3	138.5	2485	10.25	1.66	-1.17	1.91E-02	-1.08E-04	0.39	5.29E+04	20.7
	2	1.03E-02	66.8	3.51	0.79	5.69	4.72E-03	5.25E-04	0.39	1.20E-03	101.7
38	4	139.6	2778	13.73	2.37	-2.84	2.03E-02	-2.08E-04	0.44	5.96E+04	23.6
	2	1.04E-02	66.9	4.48	1.23	7.34	4.60E-03	5.38E-04	0.43	1.19E-03	111.1
38	5	141.8	2780	13.83	2.41	-3.03	2.01E-02	-2.18E-04	0.44	6.05E+04	23.9
	2	1.05E-02	67	4.54	1.23	7.11	4.58E-03	5.13E-04	0.43	1.17E-03	113.1
38	6	143	2484	10.59	1.72	-1.61	1.91E-02	-1.44E-04	0.4	5.45E+04	20.5
	2	1.06E-02	67.1	3.63	0.82	5.64	4.71E-03	5.06E-04	0.39	1.16E-03	105.9
38	7	143.9	2089	7.14	1.01	-0.83	1.81E-02	-1.05E-04	0.35	4.61E+04	16.8
	2	1.07E-02	67.2	2.54	0.45	4	4.97E-03	5.03E-04	0.33	1.15E-03	101.8
38	8	147.1	0	0	0	0					NA
	2	1.09E-02	67.2	0	0	0			0	1.13E-03	
39	1	147.1	0	0	0	0					NA
	2	1.09E-02	67.2	0	0	0			0	1.13E-03	
39	2	154.3	2089	7.75	1.1	-1.42	1.83E-02	-1.66E-04	0.35	4.95E+04	17.2
	2	1.15E-02	67.2	2.76	0.49	4.42	4.94E-03	5.19E-04	0.33	1.07E-03	107.8
39	3	155.5	2482	11.65	1.87	-2.19	1.93E-02	-1.81E-04	0.41	5.92E+04	21
	2	1.16E-02	67.2	3.96	0.91	5.76	4.67E-03	4.76E-04	0.39	1.07E-03	110.8
39	4	156.6	2780	15.65	2.71	-3.97	2.06E-02	-2.60E-04	0.45	6.68E+04	24.2
	2	1.16E-02	67.3	5.11	1.41	8.05	4.60E-03	5.26E-04	0.43	1.06E-03	116.3
39	5	157.5	2976	18.2	3.38	-4.06	2.08E-02	-2.30E-04	0.46	7.19E+04	26.2
	2	1.17E-02	67.3	5.97	1.76	8.9	4.57E-03	5.05E-04	0.46	1.05E-03	114.5
39	6	158.6	2779	16	2.74	-3.75	2.08E-02	-2.42E-04	0.46	6.76E+04	24.2
	2	1.18E-02	67.3	5.18	1.45	7.5	4.59E-03	4.84E-04	0.43	1.05E-03	116.6
39	7	159.7	2483	11.94	1.93	-1.59	1.93E-02	-1.28E-04	0.41	6.08E+04	21
	2	1.19E-02	67.4	4.08	0.93	6.1	4.66E-03	4.90E-04	0.39	1.04E-03	104.6

run	point	p [mbar]	RPM [~]	T [lb]	P [hp]	Mx [in-lb]	CT [~]	CMx [~]	FM [~]	Re.75 [~]	V [ft/s]
	n [~]	rho [lb/ft3]	T [F]	Q [ft-lb]	Pi [hp]	My [in-lb]	CP [~]	CMy [~]	Mtip [~]	nu [ft2/s]	phi [deg]
39	8	160.7	2088	8.19	1.16	-1.17	1.86E-02	-1.32E-04	0.36	5.15E+04	17
	2	1.19E-02	67.4	2.92	0.53	4.33	4.97E-03	4.89E-04	0.33	1.03E-03	105.1
39	9	162.6	0	0	0	0					NA
	2	1.21E-02	67.5	0	0	0			0	1.02E-03	
40	1	162.6	0	0	0	0					NA
	2	1.21E-02	67.5	0	0	0			0	1.02E-03	
40	2	164.6	2089	8.38	1.19	-0.89	1.86E-02	-9.77E-05	0.36	5.28E+04	17.5
	2	1.22E-02	67.5	2.99	0.54	4.88	4.94E-03	5.38E-04	0.33	1.01E-03	100.3
40	3	165.6	2482	12.52	2.02	-2.35	1.95E-02	-1.82E-04	0.41	6.31E+04	21.7
	2	1.23E-02	67.5	4.28	0.98	6.18	4.68E-03	4.79E-04	0.39	1.00E-03	110.8
40	4	166.6	2780	16.71	2.88	-3.51	2.07E-02	-2.16E-04	0.46	7.10E+04	24.5
	2	1.24E-02	67.5	5.45	1.51	8.11	4.57E-03	4.98E-04	0.43	9.96E-04	113.4
40	5	167.6	2975	19.38	3.64	-4.05	2.08E-02	-2.16E-04	0.46	7.65E+04	26.6
	2	1.24E-02	67.5	6.43	1.88	9.53	4.60E-03	5.09E-04	0.46	9.90E-04	113
40	6	168.7	2779	16.93	2.92	-4.01	2.07E-02	-2.44E-04	0.46	7.19E+04	24.4
	2	1.25E-02	67.5	5.53	1.53	8.03	4.57E-03	4.88E-04	0.43	9.84E-04	116.6
40	7	169.7	2483	12.95	2.08	-2.25	1.97E-02	-1.70E-04	0.42	6.47E+04	21.5
	2	1.26E-02	67.6	4.39	1.02	6.06	4.66E-03	4.58E-04	0.39	9.78E-04	110.4
40	8	171.2	2089	8.71	1.23	-0.79	1.86E-02	-8.39E-05	0.37	5.49E+04	17.3
	2	1.27E-02	67.6	3.08	0.56	4.91	4.87E-03	5.20E-04	0.33	9.69E-04	99.2
40	9	173.1	0	0	0	0					NA
	2	1.29E-02	67.6	0	0	0			0	9.59E-04	
41	1	173.1	0	0	0	0					NA
	2	1.29E-02	67.6	0	0	0			0	9.59E-04	
41	2	176.3	2088	9.04	1.26	-1.08	1.87E-02	-1.11E-04	0.37	5.65E+04	17.1

run	point	p [mbar]	RPM [~]	T [lb]	P [hp]	Mx [in-lb]	CT [~]	CMx [~]	FM [~]	Re.75 [~]	V [ft/s]
	n [~]	rho [lb/ft3]	T [F]	Q [ft-lb]	Pi [hp]	My [in-lb]	CP [~]	CMy [~]	Mtip [~]	nu [ft2/s]	phi [deg]
	2	1.31E-02	67.6	3.18	0.58	4.99	4.85E-03	5.14E-04	0.33	9.41E-04	102.2
41	3	177.5	2483	13.49	2.16	-2.39	1.96E-02	-1.73E-04	0.42	6.76E+04	21.7
	2	1.32E-02	67.6	4.56	1.06	7.09	4.61E-03	5.13E-04	0.39	9.35E-04	108.6
41	4	178.9	2779	18.05	3.08	-4.19	2.08E-02	-2.40E-04	0.47	7.63E+04	24.4
	2	1.33E-02	67.7	5.82	1.63	8.79	4.51E-03	5.04E-04	0.43	9.28E-04	115.5
41	5	180	2976	20.98	3.84	-4.15	2.10E-02	-2.06E-04	0.48	8.22E+04	26.4
	2	1.34E-02	67.7	6.78	2.04	10.11	4.49E-03	5.02E-04	0.46	9.22E-04	112.3
41	6	181.1	2779	18.3	3.1	-3.81	2.08E-02	-2.16E-04	0.47	7.72E+04	24.6
	2	1.34E-02	67.7	5.86	1.66	9.2	4.49E-03	5.20E-04	0.43	9.16E-04	112.5
41	7	182.1	2484	13.98	2.21	-2.22	1.98E-02	-1.57E-04	0.43	6.94E+04	21.8
	2	1.35E-02	67.7	4.68	1.1	7.04	4.59E-03	4.96E-04	0.39	9.11E-04	107.5
41	8	183.1	2087	9.46	1.32	-1.08	1.89E-02	-1.07E-04	0.38	5.86E+04	17.8
	2	1.36E-02	67.8	3.32	0.61	5.08	4.84E-03	5.04E-04	0.33	9.07E-04	102
41	9	185.1	0	0	0	0					NA
	2	1.37E-02	67.8	0	0	0			0	8.97E-04	
42	1	185.1	0	0	0	0					NA
	2	1.37E-02	67.8	0	0	0			0	8.97E-04	
42	2	186.9	2088	9.62	1.34	-1.4	1.88E-02	-1.36E-04	0.38	5.99E+04	18
	2	1.39E-02	67.8	3.36	0.62	5.49	4.80E-03	5.33E-04	0.33	8.88E-04	104.4
42	3	187.9	2483	14.32	2.27	-2.11	1.97E-02	-1.44E-04	0.43	7.16E+04	21.4
	2	1.39E-02	67.8	4.8	1.13	7.47	4.55E-03	5.11E-04	0.39	8.83E-04	105.8
42	4	188.7	2777	19.04	3.23	-4.04	2.08E-02	-2.20E-04	0.47	8.04E+04	24.7
	2	1.40E-02	67.8	6.12	1.72	9.17	4.48E-03	4.99E-04	0.43	8.79E-04	113.7
42	5	189.8	2976	22.38	4.07	-5.21	2.12E-02	-2.45E-04	0.49	8.67E+04	26.9
	2	1.41E-02	67.8	7.19	2.19	11.45	4.48E-03	5.39E-04	0.46	8.74E-04	114.5
42	6	190.9	2778	19.38	3.28	-4.34	2.10E-02	-2.33E-04	0.48	8.13E+04	24.8

run	point	p [mbar]	RPM [~]	T [lb]	P [hp]	Mx [in-lb]	CT [~]	CMx [~]	FM [~]	Re.75 [~]	V [ft/s]
	n [~]	rho [lb/ft3]	T [F]	Q [ft-lb]	Pi [hp]	My [in-lb]	CP [~]	CMy [~]	Mtip [~]	nu [ft2/s]	phi [deg]
	2	1.42E-02	67.8	6.2	1.76	9.47	4.48E-03	5.09E-04	0.43	8.69E-04	114.6
42	7	191.7	2482	14.88	2.32	-2.86	2.01E-02	-1.92E-04	0.44	7.30E+04	22
	2	1.42E-02	67.9	4.92	1.18	7.86	4.56E-03	5.27E-04	0.39	8.66E-04	110
42	8	192.7	2088	10.14	1.39	-1.66	1.92E-02	-1.56E-04	0.39	6.17E+04	18.1
	2	1.43E-02	67.9	3.49	0.66	5.08	4.79E-03	4.78E-04	0.33	8.61E-04	108.1
42	9	194.8	0	0	0	0					NA
	2	1.45E-02	67.9	0	0	0			0	8.52E-04	
43	1	194.8	0	0	0	0					NA
	2	1.45E-02	67.9	0	0	0			0	8.52E-04	
43	2	196.8	2089	10.22	1.39	-0.6	1.89E-02	-5.56E-05	0.39	6.31E+04	17.8
	2	1.46E-02	67.9	3.49	0.66	5.34	4.69E-03	4.92E-04	0.33	8.43E-04	96.5
43	3	197.7	2483	15.17	2.37	-2.39	1.98E-02	-1.55E-04	0.44	7.53E+04	21.7
	2	1.47E-02	67.9	5.02	1.2	7.4	4.50E-03	4.81E-04	0.39	8.39E-04	107.9
43	4	198.6	2778	20.15	3.38	-4.12	2.09E-02	-2.13E-04	0.48	8.46E+04	24.7
	2	1.47E-02	67.9	6.39	1.83	9.83	4.43E-03	5.08E-04	0.43	8.36E-04	112.8
43	5	199.5	2976	23.62	4.23	-5.15	2.13E-02	-2.31E-04	0.5	9.11E+04	27
	2	1.48E-02	67.9	7.47	2.32	12.09	4.42E-03	5.42E-04	0.46	8.32E-04	113.1
43	6	200.6	2778	20.42	3.41	-4.6	2.10E-02	-2.35E-04	0.49	8.55E+04	24.7
	2	1.49E-02	67.9	6.44	1.86	9.72	4.41E-03	4.97E-04	0.43	8.27E-04	115.3
43	7	201.6	2482	15.6	2.41	-2.7	2.00E-02	-1.72E-04	0.45	7.68E+04	22
	2	1.50E-02	67.9	5.1	1.24	7.73	4.48E-03	4.93E-04	0.39	8.23E-04	109.3
43	8	203.1	2088	10.69	1.43	-1.52	1.92E-02	-1.36E-04	0.41	6.50E+04	18.1
	2	1.51E-02	68	3.58	0.7	5.51	4.65E-03	4.93E-04	0.33	8.17E-04	105.5
43	9	205	0	0	0	0					NA
	2	1.52E-02	68	0	0	0			0	8.10E-04	

run	point	p [mbar]	RPM [~]	T [lb]	P [hp]	Mx [in-lb]	CT [~]	CMx [~]	FM [~]	Re.75 [~]	V [ft/s]
	n [~]	rho [lb/ft3]	T [F]	Q [ft-lb]	Pi [hp]	My [in-lb]	CP [~]	CMy [~]	Mtip [~]	nu [ft2/s]	phi [deg]
44	1	205	0	0	0	0					NA
	2	1.52E-02	68	0	0	0			0	8.10E-04	
44	2	238.1	1250	3.83	0.32	0.92	1.64E-02	1.95E-04	0.28	4.57E+04	49.6
	2	1.77E-02	67.9	1.36	0.14	2.91	5.38E-03	6.20E-04	0.19	6.96E-04	72.5
44	3	276.1	1250	4.48	0.38	1.14	1.66E-02	2.11E-04	0.29	5.29E+04	41.7
	2	2.05E-02	68.8	1.59	0.16	3.12	5.16E-03	5.74E-04	0.19	6.02E-04	69.9
44	4	309	1250	5.14	0.43	1.23	1.71E-02	2.03E-04	0.31	5.89E+04	37.1
	2	2.28E-02	70.2	1.79	0.19	3.27	5.03E-03	5.38E-04	0.19	5.40E-04	69.3
44	5	342	1249	5.78	0.47	1.54	1.74E-02	2.29E-04	0.33	6.48E+04	33.6
	2	2.52E-02	72	1.99	0.22	3.57	4.91E-03	5.33E-04	0.19	4.91E-04	66.7
44	6	374.3	1249	6.49	0.52	1.64	1.79E-02	2.25E-04	0.35	7.06E+04	31.1
	2	2.75E-02	73.5	2.19	0.24	3.56	4.84E-03	4.88E-04	0.19	4.50E-04	65.2
44	7	406.1	1249	7.09	0.57	1.43	1.81E-02	1.81E-04	0.36	7.62E+04	28.9
	2	2.97E-02	74.9	2.4	0.27	4.13	4.78E-03	5.23E-04	0.19	4.17E-04	70.9
44	8	437.5	1249	7.69	0.61	1.65	1.82E-02	1.95E-04	0.37	8.18E+04	27
	2	3.20E-02	76.2	2.57	0.29	4.21	4.70E-03	4.96E-04	0.19	3.89E-04	68.6
44	9	468	1249	8.27	0.66	1.79	1.84E-02	1.97E-04	0.38	8.72E+04	25.4
	2	3.41E-02	77.5	2.76	0.32	4.22	4.65E-03	4.66E-04	0.19	3.65E-04	67.1
44	10	499.4	1249	9.05	0.71	1.42	1.89E-02	1.47E-04	0.4	9.27E+04	24.1
	2	3.63E-02	78.6	2.97	0.35	4.59	4.63E-03	4.76E-04	0.19	3.43E-04	72.8
44	11	530.3	1249	9.54	0.75	1.74	1.88E-02	1.70E-04	0.4	9.82E+04	22.9
	2	3.85E-02	79.5	3.15	0.37	5.11	4.58E-03	5.00E-04	0.19	3.24E-04	71.2
44	12	559.8	1249	10.06	0.79	1.68	1.88E-02	1.56E-04	0.4	1.03E+05	21.9
	2	4.06E-02	80.4	3.33	0.39	4.98	4.55E-03	4.62E-04	0.19	3.08E-04	71.4
44	13	590	1249	10.7	0.84	1.61	1.90E-02	1.42E-04	0.41	1.09E+05	20.8
	2	4.27E-02	81.1	3.53	0.42	5.5	4.53E-03	4.85E-04	0.19	2.93E-04	73.7
44	14	617.7	1249	11.18	0.87	1.29	1.90E-02	1.09E-04	0.41	1.14E+05	20.1

run	point	p [mbar]	RPM [~]	T [lb]	P [hp]	Mx [in-lb]	CT [~]	CMx [~]	FM [~]	Re.75 [~]	V [ft/s]
	n [~]	rho [lb/ft3]	T [F]	Q [ft-lb]	Pi [hp]	My [in-lb]	CP [~]	CMy [~]	Mtip [~]	nu [ft2/s]	phi [deg]
	2	4.47E-02	81.8	3.67	0.43	6.1	4.48E-03	5.15E-04	0.19	2.80E-04	78.1
44	15	646	1249	11.72	0.92	1.33	1.91E-02	1.07E-04	0.42	1.18E+05	19.3
	2	4.66E-02	82.4	3.85	0.46	6.38	4.46E-03	5.16E-04	0.19	2.68E-04	78.2
44	16	671.6	1248	12.36	0.98	0.39	1.93E-02	3.07E-05	0.42	1.23E+05	18.8
	2	4.85E-02	82.9	4.13	0.48	6.71	4.55E-03	5.22E-04	0.19	2.58E-04	86.6
44	17	698.1	1248	12.86	1	-0.16	1.94E-02	-1.22E-05	0.43	1.28E+05	18.1
	2	5.03E-02	83.3	4.2	0.5	6.83	4.45E-03	5.12E-04	0.19	2.49E-04	91.4
44	18	723.5	1248	13.49	1.02	0.28	1.96E-02	2.00E-05	0.45	1.32E+05	17.5
	2	5.21E-02	83.7	4.28	0.53	6.72	4.36E-03	4.86E-04	0.19	2.40E-04	87.6
44	19	748	1248	13.87	1.05	-0.55	1.95E-02	-3.86E-05	0.45	1.37E+05	17
	2	5.39E-02	83.9	4.42	0.55	6.82	4.34E-03	4.78E-04	0.19	2.33E-04	94.6
44	20	770.5	1248	14.35	1.09	0.23	1.96E-02	1.54E-05	0.45	1.41E+05	16.7
	2	5.55E-02	84.1	4.59	0.57	7.33	4.35E-03	4.98E-04	0.19	2.26E-04	88.2
44	21	792.7	1248	14.81	1.12	-0.64	1.97E-02	-4.26E-05	0.45	1.45E+05	16.3
	2	5.71E-02	84.1	4.7	0.59	6.78	4.33E-03	4.48E-04	0.19	2.20E-04	95.4
44	22	814.2	1248	15.28	1.14	-0.16	1.98E-02	-1.02E-05	0.46	1.48E+05	15.8
	2	5.86E-02	84.2	4.79	0.61	6.63	4.28E-03	4.27E-04	0.19	2.14E-04	91.4
44	23	835.2	1248	15.8	1.16	-0.82	2.00E-02	-5.13E-05	0.47	1.52E+05	15.5
	2	6.01E-02	84.2	4.89	0.63	7.41	4.25E-03	4.65E-04	0.19	2.09E-04	96.3
44	24	857.4	1247	16.51	1.2	-1.86	2.03E-02	-1.14E-04	0.48	1.56E+05	15.3
	2	6.17E-02	84.1	5.06	0.66	7.24	4.26E-03	4.43E-04	0.19	2.03E-04	104.4
44	25	878.4	1247	16.71	1.22	-2.15	2.01E-02	-1.28E-04	0.48	1.60E+05	14.9
	2	6.32E-02	84.1	5.15	0.67	7.6	4.23E-03	4.54E-04	0.19	1.98E-04	105.8
44	26	901.1	1247	17.24	1.26	-1.61	2.02E-02	-9.40E-05	0.48	1.64E+05	14.4
	2	6.49E-02	83.9	5.3	0.69	8.39	4.23E-03	4.89E-04	0.19	1.93E-04	100.9
44	27	917.6	1247	17.54	1.28	-2.54	2.02E-02	-1.45E-04	0.48	1.68E+05	14.2
	2	6.61E-02	83.7	5.41	0.7	7.95	4.22E-03	4.55E-04	0.19	1.89E-04	107.7

run	point	p [mbar]	RPM [~]	T [lb]	P [hp]	Mx [in-lb]	CT [~]	CMx [~]	FM [~]	Re.75 [~]	V [ft/s]
	n [~]	rho [lb/ft3]	T [F]	Q [ft-lb]	Pi [hp]	My [in-lb]	CP [~]	CMy [~]	Mtip [~]	nu [ft2/s]	phi [deg]
44	28	933.2	1247	17.85	1.32	-2.39	2.02E-02	-1.34E-04	0.48	1.71E+05	13.8
	2	6.73E-02	83.4	5.55	0.71	9.06	4.24E-03	5.09E-04	0.19	1.86E-04	104.8
44	29	946.2	1247	18.13	1.32	-3.27	2.02E-02	-1.81E-04	0.48	1.73E+05	13.7
	2	6.82E-02	83.2	5.57	0.73	8.81	4.20E-03	4.88E-04	0.19	1.83E-04	110.3
44	30	958.7	1247	18.49	1.34	-2.37	2.03E-02	-1.29E-04	0.49	1.75E+05	13.5
	2	6.92E-02	83	5.65	0.74	9.68	4.20E-03	5.29E-04	0.19	1.81E-04	103.7
44	31	971	1247	18.74	1.37	-2.72	2.03E-02	-1.47E-04	0.49	1.78E+05	13.1
	2	7.01E-02	82.7	5.77	0.75	9.44	4.22E-03	5.09E-04	0.19	1.78E-04	106.1
44	32	980.4	1246	18.88	1.38	-3.71	2.03E-02	-1.98E-04	0.49	1.80E+05	13.1
	2	7.08E-02	82.4	5.82	0.76	10.04	4.21E-03	5.37E-04	0.19	1.77E-04	110.2
44	33	989.1	1246	19	1.4	-3.17	2.02E-02	-1.68E-04	0.48	1.82E+05	12.8
	2	7.15E-02	82.1	5.88	0.76	9.71	4.21E-03	5.14E-04	0.19	1.75E-04	108.1
44	34	995.9	1246	19.13	1.4	-2.98	2.02E-02	-1.57E-04	0.48	1.83E+05	12.6
	2	7.20E-02	81.7	5.92	0.77	10.33	4.20E-03	5.42E-04	0.19	1.73E-04	106.1
44	35	1001.6	1246	19.27	1.48	-3.57	2.02E-02	-1.87E-04	0.47	1.84E+05	12.3
	2	7.25E-02	81.4	6.23	0.77	10.74	4.37E-03	5.61E-04	0.19	1.72E-04	108.4
44	36	1018.5	1246	19.74	1.44	-2.29	2.02E-02	-1.17E-04	0.49	1.90E+05	11.6
	2	7.43E-02	77.2	6.06	0.79	10.64	4.17E-03	5.43E-04	0.19	1.67E-04	102.1
44	37	1018.6	0	0	0	0					NA
	2	7.44E-02	76.3	0	0	0			0	1.66E-04	
45	1	1020.1	507	3.24	0.08	2	1.15E-02	6.01E-04	0.16	8.05E+04	3.7
	2	7.61E-02	65.3	0.78	0.02	-0.99	5.51E-03	-2.96E-04	0.08	1.60E-04	-26.2
45	2	1020.1	1196	20.56	1.24	-4.31	2.09E-02	-2.33E-04	0.53	1.90E+05	10.8
	2	7.61E-02	65.3	5.45	0.75	10.22	4.02E-03	5.52E-04	0.19	1.60E-04	112.9
45	3	1020	1197	20.66	1.24	-4.32	2.09E-02	-2.33E-04	0.53	1.90E+05	10.5
	2	7.61E-02	65.3	5.45	0.76	11.1	4.01E-03	5.98E-04	0.19	1.60E-04	111.3

run	point	p [mbar]	RPM [~]	T [lb]	P [hp]	Mx [in-lb]	CT [~]	CMx [~]	FM [~]	Re.75 [~]	V [ft/s]
	n [~]	rho [lb/ft3]	T [F]	Q [ft-lb]	Pi [hp]	My [in-lb]	CP [~]	CMy [~]	Mtip [~]	nu [ft2/s]	phi [deg]
45	4	1020	1196	20.61	1.23	-4.03	2.09E-02	-2.18E-04	0.54	1.90E+05	10.9
	2	7.61E-02	65.3	5.42	0.75	10.47	4.00E-03	5.65E-04	0.19	1.60E-04	111.1
45	5	1020	1193	20.48	1.23	-4.46	2.09E-02	-2.42E-04	0.53	1.89E+05	10.8
	2	7.61E-02	65.3	5.42	0.75	9.84	4.02E-03	5.34E-04	0.19	1.60E-04	114.4
45	6	1020	1193	20.42	1.22	-3.97	2.08E-02	-2.16E-04	0.53	1.89E+05	10.9
	2	7.61E-02	65.3	5.38	0.74	10.21	4.00E-03	5.54E-04	0.19	1.60E-04	111.3
45	7	1020	1195	20.51	1.23	-4.12	2.09E-02	-2.23E-04	0.53	1.90E+05	10.9
	2	7.61E-02	65.3	5.42	0.75	10.18	4.00E-03	5.51E-04	0.19	1.60E-04	112
45	8	1020	1195	20.59	1.24	-4.1	2.10E-02	-2.22E-04	0.53	1.90E+05	10.7
	2	7.61E-02	65.3	5.43	0.75	9.98	4.01E-03	5.40E-04	0.19	1.60E-04	112.3
45	9	1020	1194	20.48	1.23	-4.16	2.09E-02	-2.25E-04	0.53	1.89E+05	10.4
	2	7.61E-02	65.3	5.4	0.74	10.19	4.00E-03	5.52E-04	0.19	1.60E-04	112.2
45	10	1020	1192	20.27	1.22	-4.21	2.07E-02	-2.29E-04	0.53	1.89E+05	10.6
	2	7.61E-02	65.3	5.38	0.73	10.17	4.00E-03	5.53E-04	0.19	1.60E-04	112.5
45	11	1020	1194	20.58	1.23	-3.17	2.10E-02	-1.72E-04	0.54	1.90E+05	11.1
	2	7.61E-02	65.3	5.4	0.75	10.88	4.00E-03	5.90E-04	0.19	1.60E-04	106.2
45	12	1020.1	1191	20.25	1.22	-3.25	2.07E-02	-1.77E-04	0.53	1.89E+05	10.6
	2	7.61E-02	65.3	5.37	0.73	9.66	4.00E-03	5.26E-04	0.19	1.60E-04	108.6
45	13	1020	1191	20.3	1.22	-4.91	2.08E-02	-2.67E-04	0.53	1.89E+05	10.6
	2	7.61E-02	65.3	5.4	0.73	9.43	4.01E-03	5.13E-04	0.19	1.60E-04	117.5
45	14	1020	1192	20.2	1.22	-4.36	2.06E-02	-2.37E-04	0.52	1.89E+05	10.6
	2	7.61E-02	65.3	5.38	0.73	9.9	3.99E-03	5.38E-04	0.19	1.60E-04	113.8
45	15	1020	1193	20.31	1.22	-4.46	2.07E-02	-2.42E-04	0.53	1.89E+05	10.7
	2	7.61E-02	65.3	5.39	0.74	9.56	4.00E-03	5.19E-04	0.19	1.60E-04	115
45	16	1020	0	0	0	0					NA
	2	7.61E-02	65.3	0	0	0			0	1.60E-04	

run	point	p [mbar]	RPM [~]	T [lb]	P [hp]	Mx [in-lb]	CT [~]	CMx [~]	FM [~]	Re.75 [~]	V [ft/s]
	n [~]	rho [lb/ft3]	T [F]	Q [ft-lb]	Pi [hp]	My [in-lb]	CP [~]	CMy [~]	Mtip [~]	nu [ft2/s]	phi [deg]
46	1	1020	0	0	0	0					NA
	2	7.61E-02	65.3	0	0	0			0	1.60E-04	
46	2	1020	1197	19.02	1.24	-3.96	2.06E-02	-2.14E-04	0.52	1.90E+05	10.7
	2	7.61E-02	65.3	5.43	0.74	9.89	4.00E-03	5.34E-04	0.19	1.60E-04	111.8
46	3	1020	1195	19.07	1.23	-3.77	2.08E-02	-2.04E-04	0.53	1.90E+05	10.9
	2	7.61E-02	65.3	5.41	0.74	10.4	4.00E-03	5.62E-04	0.19	1.60E-04	109.9
46	4	1019.9	1195	19.02	1.23	-4.16	2.07E-02	-2.25E-04	0.53	1.90E+05	10.8
	2	7.61E-02	65.3	5.42	0.74	9.71	4.01E-03	5.25E-04	0.19	1.60E-04	113.2
46	5	1019.9	1195	18.95	1.23	-3.52	2.06E-02	-1.90E-04	0.52	1.90E+05	10.5
	2	7.61E-02	65.3	5.42	0.73	8.71	4.01E-03	4.71E-04	0.19	1.60E-04	112
46	6	1019.9	1195	18.85	1.23	-3.62	2.05E-02	-1.96E-04	0.52	1.90E+05	10.6
	2	7.61E-02	65.3	5.39	0.73	9.45	3.98E-03	5.11E-04	0.19	1.60E-04	111
46	7	1020	1195	18.91	1.23	-2.35	2.06E-02	-1.27E-04	0.52	1.90E+05	10.8
	2	7.61E-02	65.3	5.39	0.73	9.56	3.99E-03	5.18E-04	0.19	1.60E-04	103.8
46	8	1020	1195	18.88	1.23	-3.58	2.06E-02	-1.94E-04	0.52	1.90E+05	10.9
	2	7.61E-02	65.3	5.4	0.73	9.03	3.99E-03	4.88E-04	0.19	1.60E-04	111.6
46	9	1019.9	1195	19	1.24	-4.06	2.07E-02	-2.19E-04	0.52	1.90E+05	10.9
	2	7.61E-02	65.3	5.43	0.74	9.73	4.01E-03	5.26E-04	0.19	1.60E-04	112.6
46	10	1020	1195	19.08	1.23	-4.47	2.08E-02	-2.42E-04	0.53	1.90E+05	10.8
	2	7.61E-02	65.4	5.43	0.74	9.74	4.01E-03	5.27E-04	0.19	1.60E-04	114.7
46	11	1019.9	1196	19.12	1.24	-4.78	2.08E-02	-2.58E-04	0.53	1.90E+05	11
	2	7.60E-02	65.4	5.43	0.74	9.29	4.01E-03	5.02E-04	0.19	1.60E-04	117.2
46	12	1019.9	0	0	0	0					NA
	2	7.60E-02	65.4	0	0	0			0	1.60E-04	
47	1	1019.9	0	0	0	0					NA
	2	7.60E-02	65.4	0	0	0			0	1.60E-04	

run	point	p [mbar]	RPM [~]	T [lb]	P [hp]	Mx [in-lb]	CT [~]	CMx [~]	FM [~]	Re.75 [~]	V [ft/s]
	n [~]	rho [lb/ft3]	T [F]	Q [ft-lb]	Pi [hp]	My [in-lb]	CP [~]	CMy [~]	Mtip [~]	nu [ft2/s]	phi [deg]
47	2	1019.9	1197	19.29	1.24	-4.53	2.09E-02	-2.45E-04	0.53	1.90E+05	10.8
	2	7.60E-02	65.4	5.44	0.75	10.07	4.01E-03	5.44E-04	0.19	1.60E-04	114.2
47	3	1019.9	1197	18.92	1.23	-3.27	2.05E-02	-1.76E-04	0.52	1.90E+05	10.5
	2	7.60E-02	65.4	5.39	0.73	9.51	3.97E-03	5.13E-04	0.19	1.60E-04	109
47	4	1019.9	1197	19.18	1.23	-4.14	2.08E-02	-2.23E-04	0.53	1.90E+05	10.9
	2	7.60E-02	65.4	5.4	0.75	9.58	3.98E-03	5.17E-04	0.19	1.60E-04	113.3
47	5	1019.9	1198	18.91	1.23	-3.29	2.05E-02	-1.77E-04	0.52	1.90E+05	10.8
	2	7.60E-02	65.4	5.39	0.73	9.95	3.96E-03	5.36E-04	0.19	1.60E-04	108.3
47	6	1019.9	1199	18.98	1.24	-4.13	2.05E-02	-2.22E-04	0.52	1.90E+05	10.8
	2	7.60E-02	65.5	5.43	0.74	9.13	3.98E-03	4.91E-04	0.19	1.60E-04	114.4
47	7	1019.8	1200	19	1.24	-3.74	2.05E-02	-2.01E-04	0.52	1.90E+05	10.9
	2	7.60E-02	65.4	5.43	0.74	9.65	3.98E-03	5.18E-04	0.19	1.60E-04	111.2
47	8	1019.9	1201	19.03	1.24	-2.88	2.05E-02	-1.54E-04	0.52	1.91E+05	10.7
	2	7.60E-02	65.4	5.43	0.74	9.42	3.97E-03	5.05E-04	0.19	1.60E-04	107
47	9	1019.8	1200	19.13	1.24	-3.85	2.07E-02	-2.07E-04	0.53	1.90E+05	10.7
	2	7.60E-02	65.5	5.45	0.74	8.78	3.99E-03	4.71E-04	0.19	1.60E-04	113.7
47	10	1019.8	1199	18.94	1.24	-3.7	2.05E-02	-1.99E-04	0.52	1.90E+05	10.9
	2	7.60E-02	65.5	5.42	0.73	10.01	3.98E-03	5.38E-04	0.19	1.60E-04	110.3
47	11	1019.8	1198	19.19	1.24	-4.51	2.08E-02	-2.43E-04	0.53	1.90E+05	10.7
	2	7.60E-02	65.5	5.45	0.75	9.14	4.01E-03	4.92E-04	0.19	1.60E-04	116.3
47	12	1019.8	0	0	0	0					NA
	2	7.60E-02	65.5	0	0	0			0	1.60E-04	
48	1	1019.8	0	0	0	0					NA
	2	7.60E-02	65.5	0	0	0			0	1.60E-04	
48	2	1019.8	1197	18.99	1.24	-4.64	2.06E-02	-2.51E-04	0.52	1.90E+05	10.9
	2	7.60E-02	65.5	5.44	0.74	9.41	4.01E-03	5.08E-04	0.19	1.60E-04	116.3

run	point	p [mbar]	RPM [~]	T [lb]	P [hp]	Mx [in-lb]	CT [~]	CMx [~]	FM [~]	Re.75 [~]	V [ft/s]
	n [~]	rho [lb/ft3]	T [F]	Q [ft-lb]	Pi [hp]	My [in-lb]	CP [~]	CMy [~]	Mtip [~]	nu [ft2/s]	phi [deg]
48	3	1019.9	1197	18.92	1.24	-4.03	2.05E-02	-2.17E-04	0.52	1.90E+05	10.5
	2	7.60E-02	65.5	5.45	0.73	9.51	4.01E-03	5.13E-04	0.19	1.60E-04	113
48	4	1019.9	1197	18.9	1.24	-3.39	2.05E-02	-1.83E-04	0.52	1.90E+05	10.9
	2	7.60E-02	65.5	5.43	0.73	8.59	4.00E-03	4.64E-04	0.19	1.60E-04	111.5
48	5	1019.9	1197	18.99	1.24	-4	2.06E-02	-2.16E-04	0.52	1.90E+05	10.9
	2	7.60E-02	65.5	5.42	0.74	9.28	4.00E-03	5.01E-04	0.19	1.60E-04	113.3
48	6	1019.9	1197	19.15	1.24	-4.47	2.08E-02	-2.41E-04	0.53	1.90E+05	11.1
	2	7.60E-02	65.5	5.45	0.75	9.46	4.01E-03	5.10E-04	0.19	1.60E-04	115.3
48	7	1019.9	1197	19.01	1.24	-4.5	2.06E-02	-2.43E-04	0.52	1.90E+05	10.7
	2	7.60E-02	65.5	5.44	0.74	9.3	4.01E-03	5.02E-04	0.19	1.60E-04	115.8
48	8	1019.9	1197	18.98	1.24	-3.6	2.06E-02	-1.94E-04	0.52	1.90E+05	11.1
	2	7.60E-02	65.5	5.43	0.74	9.63	4.00E-03	5.19E-04	0.19	1.60E-04	110.5
48	9	1019.9	1197	18.88	1.23	-2.99	2.05E-02	-1.61E-04	0.52	1.90E+05	10.9
	2	7.60E-02	65.5	5.39	0.73	9.48	3.97E-03	5.11E-04	0.19	1.60E-04	107.5
48	10	1019.8	1196	18.82	1.23	-3.6	2.05E-02	-1.94E-04	0.52	1.90E+05	11.1
	2	7.60E-02	65.5	5.39	0.73	9.92	3.98E-03	5.37E-04	0.19	1.60E-04	109.9
48	11	1019.9	1196	18.93	1.23	-3.5	2.06E-02	-1.89E-04	0.52	1.90E+05	10.7
	2	7.60E-02	65.5	5.41	0.73	9.44	3.99E-03	5.10E-04	0.19	1.60E-04	110.3
48	12	1019.8	0	0	0	0					NA
	2	7.60E-02	65.5	0	0	0			0	1.60E-04	
49	1	1019.8	0	0	0	0					NA
	2	7.60E-02	65.5	0	0	0			0	1.60E-04	
49	2	1019.8	1198	18.7	1.23	-2.67	2.02E-02	-1.44E-04	0.51	1.90E+05	10.9
	2	7.60E-02	65.5	5.4	0.72	9.57	3.97E-03	5.15E-04	0.19	1.60E-04	105.6
49	3	1019.7	1198	18.87	1.24	-2.98	2.04E-02	-1.60E-04	0.52	1.90E+05	10.5
	2	7.60E-02	65.5	5.42	0.73	9.22	3.98E-03	4.96E-04	0.19	1.61E-04	107.9

run	point	p [mbar]	RPM [~]	T [lb]	P [hp]	Mx [in-lb]	CT [~]	CMx [~]	FM [~]	Re.75 [~]	V [ft/s]
	n [~]	rho [lb/ft3]	T [F]	Q [ft-lb]	Pi [hp]	My [in-lb]	CP [~]	CMy [~]	Mtip [~]	nu [ft2/s]	phi [deg]
49	4	1019.7	1198	18.86	1.24	-3.17	2.04E-02	-1.70E-04	0.52	1.90E+05	10.8
	2	7.60E-02	65.5	5.43	0.73	9.25	3.99E-03	4.98E-04	0.19	1.61E-04	108.9
49	5	1019.8	1198	19.08	1.25	-3.8	2.07E-02	-2.05E-04	0.52	1.90E+05	10.7
	2	7.60E-02	65.5	5.47	0.74	10.55	4.01E-03	5.68E-04	0.19	1.61E-04	109.8
49	6	1019.8	1198	19.21	1.25	-4	2.08E-02	-2.15E-04	0.53	1.90E+05	10.9
	2	7.60E-02	65.5	5.47	0.75	10.34	4.02E-03	5.57E-04	0.19	1.61E-04	111.1
49	7	1019.8	1198	19.21	1.25	-3.88	2.08E-02	-2.09E-04	0.53	1.90E+05	10.9
	2	7.60E-02	65.5	5.47	0.75	9.69	4.02E-03	5.22E-04	0.19	1.61E-04	111.8
49	8	1019.8	1198	19.01	1.24	-2.86	2.06E-02	-1.54E-04	0.52	1.90E+05	11
	2	7.60E-02	65.5	5.44	0.74	9.99	4.00E-03	5.38E-04	0.19	1.61E-04	106
49	9	1019.8	1198	19.06	1.24	-3.31	2.07E-02	-1.79E-04	0.53	1.90E+05	10.9
	2	7.60E-02	65.5	5.43	0.74	9.93	4.00E-03	5.35E-04	0.19	1.61E-04	108.5
49	10	1019.7	1198	19.21	1.24	-3.78	2.08E-02	-2.04E-04	0.53	1.90E+05	11.2
	2	7.60E-02	65.5	5.45	0.75	10.77	4.01E-03	5.80E-04	0.19	1.61E-04	109.3
49	11	1019.7	1198	19.16	1.24	-3.58	2.08E-02	-1.93E-04	0.53	1.90E+05	11
	2	7.60E-02	65.5	5.43	0.75	10.28	3.99E-03	5.54E-04	0.19	1.61E-04	109.2
49	12	1019.7	0	0	0	0					NA
	2	7.60E-02	65.5	0	0	0			0	1.61E-04	
50	1	1019.7	0	0	0	0					NA
	2	7.60E-02	65.5	0	0	0			0	1.61E-04	
50	2	1019.7	1197	19.22	1.24	-4.67	2.09E-02	-2.52E-04	0.53	1.90E+05	10.9
	2	7.60E-02	65.5	5.46	0.75	9.41	4.02E-03	5.07E-04	0.19	1.61E-04	116.4
50	3	1019.6	1197	18.87	1.23	-3.11	2.05E-02	-1.68E-04	0.52	1.90E+05	10.7
	2	7.60E-02	65.6	5.4	0.73	9.31	3.98E-03	5.02E-04	0.19	1.61E-04	108.5
50	4	1019.6	1197	19.03	1.24	-3.64	2.07E-02	-1.97E-04	0.52	1.90E+05	11.1
	2	7.60E-02	65.5	5.44	0.74	9.59	4.01E-03	5.18E-04	0.19	1.61E-04	110.8

run	point	p [mbar]	RPM [~]	T [lb]	P [hp]	Mx [in-lb]	CT [~]	CMx [~]	FM [~]	Re.75 [~]	V [ft/s]
	n [~]	rho [lb/ft3]	T [F]	Q [ft-lb]	Pi [hp]	My [in-lb]	CP [~]	CMy [~]	Mtip [~]	nu [ft2/s]	phi [deg]
50	5	1019.6	1197	19.07	1.23	-2.74	2.07E-02	-1.48E-04	0.53	1.90E+05	11
	2	7.60E-02	65.5	5.39	0.74	10.02	3.98E-03	5.40E-04	0.19	1.61E-04	105.3
50	6	1019.6	1197	18.9	1.23	-3.51	2.05E-02	-1.89E-04	0.52	1.90E+05	11.2
	2	7.60E-02	65.5	5.41	0.73	9.65	3.99E-03	5.21E-04	0.19	1.61E-04	110
50	7	1019.5	1197	18.98	1.23	-3.71	2.06E-02	-2.00E-04	0.52	1.90E+05	11
	2	7.60E-02	65.5	5.41	0.74	10.01	3.99E-03	5.40E-04	0.19	1.61E-04	110.4
50	8	1019.5	1196	19.03	1.24	-3.09	2.07E-02	-1.67E-04	0.52	1.90E+05	10.9
	2	7.60E-02	65.5	5.46	0.74	8.95	4.02E-03	4.84E-04	0.19	1.61E-04	109
50	9	1019.5	0	0	0	0					NA
	2	7.60E-02	65.5	0	0	0			0	1.61E-04	
51	1	1026.8	0	0	0	0					NA
	1	7.65E-02	65.8	0	0	0			0		
51	2	1026.8	604	2.99	0.07	-1.21	1.27E-02	-2.54E-04	0.29		3.8
	1	7.65E-02	65.8	0.61	0.05	-0.19	3.43E-03	-4.02E-05	0.09		-171
51	3	1026.8	705	4.25	0.12	-2.02	1.32E-02	-3.12E-04	0.36		4.8
	1	7.65E-02	65.8	0.88	0.08	-0.21	3.01E-03	-3.27E-05	0.11		-174
51	4	1026.7	804	5.57	0.18	-2.77	1.33E-02	-3.29E-04	0.4		5.5
	1	7.65E-02	65.8	1.17	0.12	0.35	2.74E-03	4.14E-05	0.13		172.8
51	5	1026.7	903	6.95	0.26	-3.38	1.32E-02	-3.19E-04	0.42		6.4
	1	7.65E-02	65.8	1.53	0.16	0.73	2.57E-03	6.91E-05	0.14		167.8
51	6	1026.7	1002	8.46	0.36	-3.61	1.30E-02	-2.76E-04	0.44		7.1
	1	7.65E-02	65.8	1.88	0.22	1.28	2.41E-03	9.81E-05	0.16		160.5
51	7	1026.7	1100	10.26	0.48	-4.78	1.31E-02	-3.04E-04	0.46		7.9
	1	7.65E-02	65.8	2.28	0.29	1.13	2.31E-03	7.15E-05	0.17		166.8
51	8	1026.7	1199	11.89	0.61	-3.49	1.28E-02	-1.86E-04	0.46		8.7
	1	7.65E-02	65.8	2.69	0.36	1.26	2.21E-03	6.75E-05	0.19		160.1

run	point	p [mbar]	RPM [~]	T [lb]	P [hp]	Mx [in-lb]	CT [~]	CMx [~]	FM [~]	Re.75 [~]	V [ft/s]
	n [~]	rho [lb/ft3]	T [F]	Q [ft-lb]	Pi [hp]	My [in-lb]	CP [~]	CMy [~]	Mtip [~]	nu [ft2/s]	phi [deg]
51	9	1026.6	1297	14.09	0.77	-4.08	1.29E-02	-1.86E-04	0.49		9.6
	1	7.65E-02	65.8	3.12	0.47	4.7	2.12E-03	2.15E-04	0.2		131
51	10	1026.6	1397	16.33	0.97	-4.84	1.29E-02	-1.91E-04	0.5		10.1
	1	7.65E-02	65.8	3.63	0.59	4.85	2.07E-03	1.91E-04	0.22		135
51	11	1026.6	1496	18.28	1.18	-5.16	1.26E-02	-1.77E-04	0.5		10.6
	1	7.65E-02	65.8	4.14	0.69	4.22	2.02E-03	1.45E-04	0.23		140.7
51	12	1026.5	1593	21.17	1.45	-7.61	1.29E-02	-2.30E-04	0.52		11.5
	1	7.65E-02	65.8	4.77	0.86	5.79	2.00E-03	1.75E-04	0.25		142.8
51	13	1026.5	1691	23.47	1.73	-7.98	1.27E-02	-2.15E-04	0.51		12.4
	1	7.64E-02	66	5.38	1.01	6.48	1.98E-03	1.74E-04	0.26		140.9
51	14	1026.5	1791	26.72	2.07	-9.51	1.29E-02	-2.28E-04	0.53		13.5
	1	7.64E-02	66	6.06	1.23	8.5	1.96E-03	2.04E-04	0.28		138.2
51	15	1026.5	1888	29.86	2.43	-10.4	1.29E-02	-2.24E-04	0.54		14.2
	1	7.65E-02	65.8	6.77	1.45	9.41	1.94E-03	2.03E-04	0.3		137.9
51	16	1026.5	1986	33.21	2.84	-11.25	1.30E-02	-2.19E-04	0.54		14.9
	1	7.64E-02	66	7.52	1.7	11.29	1.93E-03	2.20E-04	0.31		134.9
51	17	1026.5	2085	36.42	3.29	-10.74	1.29E-02	-1.90E-04	0.54		15.4
	1	7.64E-02	66	8.3	1.95	13.18	1.92E-03	2.33E-04	0.33		129.2
51	18	1026.5	2183	40.66	3.83	-13.5	1.32E-02	-2.18E-04	0.56		16.1
	1	7.64E-02	66	9.21	2.3	14.17	1.93E-03	2.28E-04	0.34		133.6
51	19	1026.5	0	0	0	0					NA
	1	7.64E-02	66	0	0	0			0		
52	1	830	2083	31.54	2.75	-4.64	1.38E-02	-1.01E-04	0.57		NA
	1	6.23E-02	62.2	6.94	1.74	21.69	2.01E-03	4.72E-04	0.33		102.1
52	2	795	2083	30.41	2.67	-5.39	1.38E-02	-1.22E-04	0.57		NA
	1	6.00E-02	59	6.72	1.68	19.83	2.02E-03	4.47E-04	0.33		105.2

run	point	p [mbar]	RPM [~]	T [lb]	P [hp]	Mx [in-lb]	CT [~]	CMx [~]	FM [~]	Re.75 [~]	V [ft/s]
	n [~]	rho [lb/ft3]	T [F]	Q [ft-lb]	Pi [hp]	My [in-lb]	CP [~]	CMy [~]	Mtip [~]	nu [ft2/s]	phi [deg]
52	3	785	2083	30.03	2.62	-7.98	1.38E-02	-1.82E-04	0.57		NA
	1	5.94E-02	57.6	6.61	1.66	18.34	2.01E-03	4.18E-04	0.33		113.5
52	4	762.5	2083	28.83	2.56	-6.93	1.36E-02	-1.62E-04	0.55	2.56E+05	NA
	1	5.79E-02	55.9	6.46	1.58	16.54	2.02E-03	3.87E-04	0.33	2.08E-04	112.7
52	5	743.9	2083	27.82	2.49	-6.04	1.34E-02	-1.45E-04	0.54	2.50E+05	NA
	1	5.66E-02	54.6	6.28	1.51	15.55	2.02E-03	3.72E-04	0.33	2.12E-04	111.2
52	6	725.6	2083	27.18	2.43	-6.32	1.34E-02	-1.55E-04	0.54	2.45E+05	NA
	1	5.54E-02	53.3	6.13	1.48	14.81	2.02E-03	3.62E-04	0.33	2.16E-04	113.1
52	7	706.6	2083	26.62	2.36	-6.94	1.34E-02	-1.74E-04	0.55	2.40E+05	NA
	1	5.40E-02	52.2	5.96	1.45	14.56	2.02E-03	3.65E-04	0.33	2.21E-04	115.5
52	8	688.4	2083	25.9	2.32	-7.4	1.34E-02	-1.90E-04	0.54	2.34E+05	NA
	1	5.27E-02	51.3	5.84	1.41	13.3	2.03E-03	3.42E-04	0.33	2.26E-04	119.1
52	9	671.3	2083	25.08	2.24	-6.87	1.33E-02	-1.81E-04	0.53	2.29E+05	NA
	1	5.15E-02	50.6	5.66	1.36	13.22	2.02E-03	3.48E-04	0.33	2.31E-04	117.5
52	10	653.7	2083	24.51	2.2	-7.07	1.33E-02	-1.91E-04	0.53	2.24E+05	NA
	1	5.02E-02	49.8	5.55	1.33	12.68	2.04E-03	3.42E-04	0.33	2.37E-04	119.2
52	11	637.1	2082	23.7	2.15	-6.75	1.32E-02	-1.87E-04	0.52	2.18E+05	NA
	1	4.90E-02	49.2	5.41	1.28	11.72	2.04E-03	3.24E-04	0.33	2.43E-04	120
52	12	618.6	2083	22.99	2.08	-6.67	1.32E-02	-1.90E-04	0.52	2.13E+05	NA
	1	4.77E-02	48.5	5.26	1.24	11.46	2.05E-03	3.26E-04	0.33	2.49E-04	120.2
52	13	602.8	2083	22.47	2.04	-6.7	1.32E-02	-1.95E-04	0.52	2.08E+05	NA
	1	4.65E-02	47.9	5.15	1.21	10.32	2.06E-03	3.01E-04	0.33	2.55E-04	123
52	14	587	2083	21.75	1.98	-6.47	1.31E-02	-1.93E-04	0.51	2.03E+05	NA
	1	4.53E-02	47.4	4.99	1.17	10.43	2.06E-03	3.12E-04	0.33	2.62E-04	121.8
52	15	570.6	2083	21.02	1.93	-6.51	1.30E-02	-2.00E-04	0.5	1.97E+05	NA
	1	4.41E-02	46.9	4.88	1.13	10.17	2.07E-03	3.12E-04	0.33	2.69E-04	122.6
52	16	554.8	2083	20.42	1.88	-5.76	1.30E-02	-1.82E-04	0.5	1.92E+05	NA

run	point	p [mbar]	RPM [~]	T [lb]	P [hp]	Mx [in-lb]	CT [~]	CMx [~]	FM [~]	Re.75 [~]	V [ft/s]
	n [~]	rho [lb/ft3]	T [F]	Q [ft-lb]	Pi [hp]	My [in-lb]	CP [~]	CMy [~]	Mtip [~]	nu [ft2/s]	phi [deg]
	1	4.29E-02	46.5	4.73	1.09	9.82	2.07E-03	3.10E-04	0.33	2.76E-04	120.4
52	17	539.9	2084	19.82	1.83	-6.09	1.29E-02	-1.97E-04	0.5	1.87E+05	NA
	1	4.18E-02	46.2	4.62	1.06	9.31	2.09E-03	3.02E-04	0.33	2.83E-04	123.2
52	18	524.5	2084	19.4	1.79	-6.7	1.30E-02	-2.23E-04	0.5	1.82E+05	NA
	1	4.06E-02	45.9	4.52	1.04	8.93	2.11E-03	2.98E-04	0.33	2.92E-04	126.9
52	19	510.2	2084	18.83	1.74	-6.4	1.30E-02	-2.19E-04	0.49	1.77E+05	NA
	1	3.95E-02	45.6	4.39	1.01	8.58	2.11E-03	2.94E-04	0.33	2.99E-04	126.7
52	20	492.2	2084	18.08	1.67	-5.92	1.29E-02	-2.10E-04	0.49	1.71E+05	NA
	1	3.82E-02	45.2	4.21	0.97	8.51	2.11E-03	3.01E-04	0.33	3.10E-04	124.8
52	21	478.8	2085	17.56	1.63	-5.72	1.29E-02	-2.08E-04	0.49	1.67E+05	NA
	1	3.72E-02	44.9	4.11	0.94	8.3	2.12E-03	3.02E-04	0.33	3.18E-04	124.6
52	22	465.8	2085	17.08	1.59	-5.84	1.28E-02	-2.18E-04	0.48	1.62E+05	NA
	1	3.62E-02	44.6	4.01	0.91	7.99	2.13E-03	2.99E-04	0.33	3.27E-04	126.1
52	23	452.3	2085	16.55	1.56	-5.67	1.28E-02	-2.18E-04	0.48	1.58E+05	NA
	1	3.51E-02	44.3	3.92	0.88	7.44	2.16E-03	2.86E-04	0.33	3.36E-04	127.3
52	24	440.1	2085	16	1.51	-5.06	1.27E-02	-2.00E-04	0.47	1.54E+05	NA
	1	3.42E-02	44.1	3.79	0.85	7.41	2.16E-03	2.93E-04	0.33	3.45E-04	124.3
52	25	428	2085	15.43	1.46	-5.06	1.26E-02	-2.06E-04	0.46	1.50E+05	NA
	1	3.33E-02	43.9	3.68	0.82	7.18	2.16E-03	2.92E-04	0.33	3.55E-04	125.2
52	26	416.4	2085	15.15	1.43	-5.02	1.27E-02	-2.10E-04	0.47	1.46E+05	NA
	1	3.24E-02	43.7	3.6	0.8	6.77	2.18E-03	2.83E-04	0.33	3.64E-04	126.6
52	27	405.1	2085	14.62	1.39	-4.56	1.26E-02	-1.95E-04	0.46	1.42E+05	NA
	1	3.15E-02	43.5	3.49	0.77	6.42	2.18E-03	2.75E-04	0.33	3.74E-04	125.4
52	28	393.7	2085	14.36	1.37	-5.45	1.27E-02	-2.41E-04	0.46	1.38E+05	NA
	1	3.06E-02	43.3	3.44	0.76	5.9	2.22E-03	2.60E-04	0.33	3.85E-04	132.8
52	29	383	2086	13.85	1.32	-4.83	1.26E-02	-2.19E-04	0.45	1.34E+05	NA
	1	2.98E-02	43.2	3.32	0.73	5.94	2.21E-03	2.69E-04	0.33	3.96E-04	129.1

run	point	p [mbar]	RPM [~]	T [lb]	P [hp]	Mx [in-lb]	CT [~]	CMx [~]	FM [~]	Re.75 [~]	V [ft/s]
	n [~]	rho [lb/ft3]	T [F]	Q [ft-lb]	Pi [hp]	My [in-lb]	CP [~]	CMy [~]	Mtip [~]	nu [ft2/s]	phi [deg]
52	30	372.4	2086	13.39	1.28	-4.41	1.26E-02	-2.05E-04	0.45	1.31E+05	NA
	1	2.90E-02	43.1	3.22	0.71	5.76	2.22E-03	2.69E-04	0.33	4.07E-04	127.4
52	31	362.2	2086	13.06	1.25	-4.45	1.26E-02	-2.13E-04	0.45	1.27E+05	NA
	1	2.82E-02	43	3.14	0.69	5.54	2.24E-03	2.65E-04	0.33	4.18E-04	128.8
52	32	350.1	2086	12.55	1.21	-4.18	1.25E-02	-2.07E-04	0.44	1.23E+05	NA
	1	2.73E-02	43	3.04	0.66	5.22	2.25E-03	2.59E-04	0.33	4.33E-04	128.7
52	33	340.3	2086	12.18	1.17	-4.3	1.25E-02	-2.19E-04	0.44	1.19E+05	NA
	1	2.65E-02	43	2.96	0.64	5.3	2.27E-03	2.70E-04	0.33	4.45E-04	129
52	34	331.2	2086	11.79	1.14	-3.79	1.24E-02	-1.98E-04	0.43	1.16E+05	NA
	1	2.58E-02	42.9	2.87	0.62	5.18	2.27E-03	2.71E-04	0.33	4.57E-04	126.2
52	35	322.1	2086	11.51	1.12	-3.73	1.25E-02	-2.01E-04	0.43	1.13E+05	NA
	1	2.51E-02	42.9	2.81	0.6	4.49	2.30E-03	2.41E-04	0.33	4.70E-04	129.8
52	36	312.8	2086	11.15	1.09	-3.77	1.24E-02	-2.09E-04	0.42	1.10E+05	NA
	1	2.44E-02	42.9	2.73	0.59	4.44	2.32E-03	2.46E-04	0.33	4.84E-04	130.3
52	37	304.5	2086	10.79	1.05	-3.43	1.24E-02	-1.95E-04	0.42	1.07E+05	NA
	1	2.37E-02	42.9	2.65	0.56	4.42	2.32E-03	2.51E-04	0.33	4.97E-04	127.8
52	38	295.5	2086	10.42	1.02	-3.14	1.23E-02	-1.84E-04	0.41	1.04E+05	NA
	1	2.30E-02	42.9	2.56	0.54	4.26	2.33E-03	2.50E-04	0.33	5.13E-04	126.4
52	39	287	2085	10.09	0.99	-3.13	1.23E-02	-1.89E-04	0.41	1.01E+05	NA
	1	2.23E-02	43	2.5	0.53	4.11	2.36E-03	2.49E-04	0.33	5.28E-04	127.2
52	40	279.2	2084	9.82	0.96	-3.01	1.23E-02	-1.87E-04	0.41	9.77E+04	NA
	1	2.17E-02	43	2.43	0.51	4	2.38E-03	2.49E-04	0.33	5.43E-04	126.9
52	41	272.3	2084	9.4	0.93	-2.37	1.21E-02	-1.51E-04	0.39	9.53E+04	NA
	1	2.12E-02	43.1	2.35	0.49	4.06	2.37E-03	2.59E-04	0.33	5.57E-04	120.3
52	42	264.5	2084	9.2	0.91	-2.81	1.22E-02	-1.85E-04	0.39	9.25E+04	NA
	1	2.06E-02	43.2	2.3	0.48	3.83	2.40E-03	2.52E-04	0.33	5.73E-04	126.3
52	43	249.1	2084	8.71	0.87	-2.67	1.22E-02	-1.86E-04	0.39	8.71E+04	NA

run	point	p [mbar]	RPM [~]	T [lb]	P [hp]	Mx [in-lb]	CT [~]	CMx [~]	FM [~]	Re.75 [~]	V [ft/s]
	n [~]	rho [lb/ft3]	T [F]	Q [ft-lb]	Pi [hp]	My [in-lb]	CP [~]	CMy [~]	Mtip [~]	nu [ft2/s]	phi [deg]
	1	1.94E-02	43.1	2.19	0.45	3.59	2.46E-03	2.51E-04	0.33	6.09E-04	126.7
52	44	237	2083	8.17	0.83	-2.47	1.21E-02	-1.81E-04	0.38	8.29E+04	NA
	1	1.85E-02	43	2.08	0.42	3.41	2.49E-03	2.50E-04	0.33	6.40E-04	126
52	45	224	2084	7.75	0.79	-2.69	1.21E-02	-2.08E-04	0.37	7.85E+04	NA
	1	1.75E-02	42.6	1.98	0.4	3.27	2.54E-03	2.54E-04	0.33	6.76E-04	129.4
52	46	213.1	2084	7.3	0.75	-2.54	1.20E-02	-2.07E-04	0.36	7.48E+04	NA
	1	1.66E-02	42.2	1.88	0.38	3.09	2.57E-03	2.51E-04	0.33	7.09E-04	129.5
52	47	204.1	2084	6.91	0.72	-2.43	1.18E-02	-2.06E-04	0.35	7.17E+04	NA
	1	1.59E-02	41.8	1.8	0.35	2.88	2.60E-03	2.45E-04	0.33	7.40E-04	130.1
52	48	195.9	2084	6.53	0.68	-2.17	1.16E-02	-1.92E-04	0.34	6.89E+04	NA
	1	1.53E-02	41.4	1.72	0.33	2.9	2.62E-03	2.56E-04	0.33	7.70E-04	126.8
52	49	187.7	2084	6.2	0.66	-2.23	1.15E-02	-2.06E-04	0.33	6.61E+04	NA
	1	1.47E-02	41.1	1.65	0.31	2.5	2.66E-03	2.31E-04	0.33	8.02E-04	131.8
52	50	180.8	2084	5.94	0.63	-2.29	1.14E-02	-2.19E-04	0.32	6.37E+04	NA
	1	1.41E-02	40.9	1.6	0.3	2.34	2.69E-03	2.24E-04	0.33	8.33E-04	134.4
52	51	161.5	2084	5.18	0.57	-1.52	1.12E-02	-1.63E-04	0.3	5.69E+04	NA
	1	1.26E-02	40.7	1.44	0.26	2.24	2.81E-03	2.40E-04	0.33	9.32E-04	124.1
52	52	138.9	2083	4.21	0.49	-1.9	1.05E-02	-2.37E-04	0.26	4.90E+04	NA
	1	1.09E-02	40.1	1.24	0.2	1.99	2.96E-03	2.48E-04	0.33	1.08E-03	133.7
52	53	118.5	2083	3.3	0.42	-1.97	9.67E-03	-2.87E-04	0.21	4.20E+04	NA
	1	9.31E-03	39	1.06	0.15	1.69	3.16E-03	2.46E-04	0.33	1.26E-03	139.4
52	54	102.5	2083	2.55	0.36	-1.94	8.61E-03	-3.25E-04	0.17	3.65E+04	NA
	1	8.06E-03	37.7	0.91	0.11	1.31	3.34E-03	2.20E-04	0.33	1.45E-03	145.9
52	55	87	2083	1.85	0.3	-1.78	7.36E-03	-3.50E-04	0.12	3.11E+04	NA
	1	6.87E-03	36.2	0.76	0.07	0.91	3.57E-03	1.79E-04	0.33	1.71E-03	152.9
52	56	74.7	2083	1.29	0.25	-1.85	5.94E-03	-4.24E-04	0.08	2.68E+04	NA
	1	5.91E-03	34.9	0.64	0.05	0.78	3.81E-03	1.78E-04	0.34	1.98E-03	157.2

run	point	p [mbar]	RPM [~]	T [lb]	P [hp]	Mx [in-lb]	CT [~]	CMx [~]	FM [~]	Re.75 [~]	V [ft/s]
	n [~]	rho [lb/ft3]	T [F]	Q [ft-lb]	Pi [hp]	My [in-lb]	CP [~]	CMy [~]	Mtip [~]	nu [ft2/s]	phi [deg]
52	57	63.1	2083	0.86	0.21	-1.13	4.70E-03	-3.07E-04	0.06	2.27E+04	NA
	1	5.01E-03	33.4	0.52	0.03	0.46	4.13E-03	1.26E-04	0.34	2.33E-03	157.7
52	58	55.5	2082	0.61	0.18	-1.37	3.79E-03	-4.22E-04	0.04	2.01E+04	NA
	1	4.41E-03	32.5	0.45	0.02	0.22	4.40E-03	6.65E-05	0.34	2.64E-03	171
52	59	46.4	2083	0.33	0.14	-0.43	2.41E-03	-1.58E-04	0.02	1.68E+04	NA
	1	3.70E-03	31.6	0.35	0.01	-0.13	4.83E-03	-4.70E-05	0.34	3.15E-03	-163.4
52	60	42.1	2083	0.21	0.12	-0.59	1.69E-03	-2.37E-04	0.01	1.52E+04	NA
	1	3.36E-03	31.5	0.31	0	-0.3	5.14E-03	-1.21E-04	0.34	3.48E-03	-153
52	61	38.2	2083	0.12	0.11	-0.48	1.09E-03	-2.14E-04	0	1.38E+04	NA
	1	3.04E-03	31.9	0.27	0	-0.49	5.46E-03	-2.20E-04	0.34	3.84E-03	-134.1
52	62	35.7	2082	0.08	0.1	-0.39	7.57E-04	-1.85E-04	0	1.29E+04	NA
	1	2.84E-03	32.4	0.25	0	-0.62	5.72E-03	-2.97E-04	0.34	4.12E-03	-121.9
52	63	33.7	2082	0.03	0.09	-0.22	3.35E-04	-1.14E-04	0	1.21E+04	NA
	1	2.68E-03	33	0.23	0	-0.61	5.95E-03	-3.07E-04	0.34	4.38E-03	-110.3
52	64	32.1	2082	-0.02	0.09	-0.12	-2.22E-04	-6.57E-05	0	1.15E+04	NA
	1	2.54E-03	33.7	0.22	0	-0.6	6.17E-03	-3.20E-04	0.34	4.62E-03	78.4
52	65	30.6	2083	-0.03	0.08	0.13	-3.27E-04	7.43E-05	0	1.09E+04	NA
	1	2.43E-03	34.4	0.2	0	-0.56	6.37E-03	-3.15E-04	0.34	4.86E-03	103.3
52	66	29.4	2082	-0.01	0.08	0.32	-1.10E-04	1.87E-04	0	1.04E+04	NA
	1	2.33E-03	35.2	0.19	0	-0.64	6.55E-03	-3.75E-04	0.34	5.07E-03	116.4
52	67	28.4	2083	0.11	0.23	0.18	1.38E-03	1.06E-04	0	1.01E+04	NA
	1	2.25E-03	36	0.57	0	-0.97	9.53E-03	-5.86E-04	0.34	5.27E-03	-79.7
52	68	27.5	2083	0.21	0.2	0	2.63E-03	-1.09E-07	0.01	9.68E+03	NA
	1	2.17E-03	36.9	0.5	0.01	-1.1	9.40E-03	-6.86E-04	0.33	5.48E-03	-90
52	69	26.7	2082	0.15	0.09	0.13	1.99E-03	8.38E-05	0.01	9.38E+03	NA
	1	2.10E-03	37.8	0.23	0	-0.83	7.54E-03	-5.37E-04	0.33	5.65E-03	-81.1
52	70	26.1	2082	0.11	0.08	0.13	1.51E-03	8.34E-05	0.01	9.13E+03	NA

run	point	p [mbar]	RPM [~]	T [lb]	P [hp]	Mx [in-lb]	CT [~]	CMx [~]	FM [~]	Re.75 [~]	V [ft/s]
	n [~]	rho [lb/ft3]	T [F]	Q [ft-lb]	Pi [hp]	My [in-lb]	CP [~]	CMy [~]	Mtip [~]	nu [ft2/s]	phi [deg]
	1	2.05E-03	38.6	0.2	0	-0.75	7.50E-03	-4.92E-04	0.33	5.81E-03	-80.4
52	71	25.6	2082	0.12	0.08	0.23	1.61E-03	1.53E-04	0.01	8.92E+03	NA
	1	2.01E-03	39.4	0.19	0	-0.64	7.60E-03	-4.31E-04	0.33	5.94E-03	-70.5
52	72	25.1	2083	0.14	0.07	0.4	1.93E-03	2.74E-04	0.01	8.71E+03	NA
	1	1.97E-03	40.2	0.18	0	-0.55	7.70E-03	-3.77E-04	0.33	6.09E-03	-54
52	73	24.7	2083	0.16	0.07	0.48	2.19E-03	3.36E-04	0.01	8.55E+03	NA
	1	1.94E-03	40.9	0.18	0	-0.48	7.79E-03	-3.36E-04	0.33	6.20E-03	-45
52	74	24.4	2083	0.17	0.07	0.65	2.44E-03	4.64E-04	0.01	8.41E+03	NA
	1	1.91E-03	41.6	0.17	0	-0.38	7.87E-03	-2.67E-04	0.33	6.30E-03	-29.9
52	75	24.1	2083	0.19	0.07	0.83	2.82E-03	5.97E-04	0.01	8.27E+03	NA
	1	1.88E-03	42.4	0.17	0	-0.32	7.97E-03	-2.30E-04	0.33	6.41E-03	-21.1
52	76	23.8	2083	0.22	0.07	0.9	3.23E-03	6.59E-04	0.02	8.16E+03	NA
	1	1.85E-03	43	0.17	0.01	-0.33	8.04E-03	-2.44E-04	0.33	6.50E-03	-20.3
52	77	23.6	2083	0.24	0.07	1.04	3.64E-03	7.70E-04	0.02	8.06E+03	NA
	1	1.83E-03	43.7	0.17	0.01	-0.25	8.12E-03	-1.82E-04	0.33	6.58E-03	-13.3
52	78	23.4	2083	0.27	0.07	1.17	4.00E-03	8.72E-04	0.02	7.96E+03	NA
	1	1.82E-03	44.4	0.16	0.01	-0.25	8.18E-03	-1.88E-04	0.33	6.66E-03	-12.2
52	79	23.2	2083	0.3	0.06	1.23	4.50E-03	9.25E-04	0.03	7.87E+03	NA
	1	1.80E-03	45.1	0.16	0.01	-0.22	8.22E-03	-1.69E-04	0.33	6.73E-03	-10.3
52	80	23	2083	0.34	0.07	1.34	5.21E-03	1.02E-03	0.03	7.78E+03	NA
	1	1.78E-03	45.9	0.17	0.01	-0.23	8.37E-03	-1.77E-04	0.33	6.81E-03	-9.8
52	81	22.8	2083	0.37	0.07	1.49	5.67E-03	1.15E-03	0.04	7.71E+03	NA
	1	1.77E-03	46.5	0.16	0.01	-0.22	8.41E-03	-1.68E-04	0.33	6.88E-03	-8.3
52	82	28.9	0	0	0	0					NA
	1	2.22E-03	50.9	0	0	0			0	5.52E-03	
53	1	30.1	0	0	0	0					NA

run	point	p [mbar]	RPM [~]	T [lb]	P [hp]	Mx [in-lb]	CT [~]	CMx [~]	FM [~]	Re.75 [~]	V [ft/s]
	n [~]	rho [lb/ft3]	T [F]	Q [ft-lb]	Pi [hp]	My [in-lb]	CP [~]	CMy [~]	Mtip [~]	nu [ft2/s]	phi [deg]
	1	2.30E-03	51.5	0	0	0			0	5.30E-03	
53	2	33.7	2086	0.79	0.1	-0.42	8.34E-03	-2.18E-04	0.08	1.11E+04	6.1
	1	2.57E-03	53.1	0.26	0.03	-0.25	6.38E-03	-1.30E-04	0.33	4.77E-03	-149.2
53	3	35.2	2482	1.16	0.24	0.17	8.30E-03	6.12E-05	0.1	1.38E+04	10.3
	1	2.68E-03	53.9	0.51	0.06	-0.31	5.37E-03	-1.10E-04	0.39	4.57E-03	-60.9
53	4	36.3	2777	1.58	0.33	0.51	8.74E-03	1.40E-04	0.13	1.59E+04	12.7
	1	2.77E-03	54.4	0.62	0.09	-0.26	4.53E-03	-7.07E-05	0.44	4.44E-03	-26.8
53	5	37.5	2975	1.98	0.53	0.97	9.29E-03	2.27E-04	0.14	1.76E+04	14.4
	1	2.85E-03	54.8	0.93	0.13	-0.18	4.68E-03	-4.11E-05	0.47	4.30E-03	-10.3
53	6	39.2	2777	1.94	0.33	2.09	9.97E-03	5.33E-04	0.17	1.72E+04	14
	1	2.98E-03	55.4	0.63	0.12	0.16	4.23E-03	4.14E-05	0.44	4.12E-03	4.4
53	7	40.4	2480	1.49	0.23	1.83	9.33E-03	5.70E-04	0.14	1.58E+04	12.1
	1	3.07E-03	55.7	0.49	0.08	0.15	4.63E-03	4.72E-05	0.39	4.01E-03	4.7
53	8	41.9	2086	1.03	0.13	1.74	8.78E-03	7.37E-04	0.11	1.37E+04	11.3
	1	3.18E-03	56.2	0.34	0.05	0.33	5.53E-03	1.39E-04	0.33	3.87E-03	10.7
53	9	45.4	0	0	0	0					NA
	1	3.44E-03	57.2	0	0	0			0	3.57E-03	
54	1	45.4	0	0	0	0					NA
	1	3.44E-03	57.2	0	0	0			0	3.57E-03	
54	2	48.4	2086	1.15	0.16	0.24	8.56E-03	8.94E-05	0.11	1.58E+04	11.5
	1	3.66E-03	57.9	0.4	0.05	0.32	5.09E-03	1.16E-04	0.33	3.36E-03	52.4
54	3	49.8	2482	1.61	0.29	0.71	8.21E-03	1.80E-04	0.13	1.93E+04	14.7
	1	3.77E-03	58.3	0.62	0.08	0.42	4.15E-03	1.05E-04	0.39	3.27E-03	30.3
54	4	51.5	2777	2.34	0.43	0.47	9.20E-03	9.25E-05	0.17	2.24E+04	15.4
	1	3.89E-03	58.7	0.82	0.14	0.35	3.69E-03	6.94E-05	0.44	3.16E-03	36.9
54	5	52.5	2975	2.78	0.56	0.22	9.36E-03	3.61E-05	0.18	2.44E+04	16.7

run	point	p [mbar]	RPM [~]	T [lb]	P [hp]	Mx [in-lb]	CT [~]	CMx [~]	FM [~]	Re.75 [~]	V [ft/s]
	n [~]	rho [lb/ft3]	T [F]	Q [ft-lb]	Pi [hp]	My [in-lb]	CP [~]	CMy [~]	Mtip [~]	nu [ft2/s]	phi [deg]
	1	3.96E-03	58.9	0.99	0.18	0.29	3.50E-03	4.84E-05	0.47	3.10E-03	53.2
54	6	53.7	2778	2.49	0.45	0.86	9.41E-03	1.62E-04	0.18	2.33E+04	16.3
	1	4.06E-03	59.2	0.86	0.15	0.28	3.62E-03	5.27E-05	0.44	3.03E-03	18
54	7	55.3	2481	1.8	0.32	1.14	8.27E-03	2.60E-04	0.14	2.14E+04	14.4
	1	4.17E-03	59.5	0.68	0.09	0.96	3.93E-03	2.20E-04	0.39	2.95E-03	40.2
54	8	56.3	2087	1.25	0.19	1.08	7.97E-03	3.42E-04	0.11	1.83E+04	11.7
	1	4.25E-03	59.7	0.47	0.05	0.98	4.63E-03	3.12E-04	0.33	2.90E-03	42.4
54	9	59.7	0	0	0	0					NA
	1	4.50E-03	60.2	0	0	0			0	2.74E-03	
55	1	59.7	0	0	0	0					NA
	1	4.50E-03	60.2	0	0	0			0	2.74E-03	
55	2	62.9	2086	1.62	0.21	0.28	9.27E-03	7.89E-05	0.14	2.04E+04	12.1
	1	4.73E-03	60.7	0.54	0.07	0.62	4.40E-03	1.78E-04	0.33	2.60E-03	66.1
55	3	63.8	2481	2.27	0.38	0.25	9.07E-03	4.99E-05	0.17	2.46E+04	14.4
	1	4.80E-03	60.8	0.8	0.12	1	3.68E-03	1.98E-04	0.39	2.56E-03	75.9
55	4	64.9	2777	3.12	0.55	-0.28	9.82E-03	-4.30E-05	0.2	2.80E+04	17.1
	1	4.88E-03	60.9	1.04	0.19	0.88	3.36E-03	1.37E-04	0.44	2.52E-03	107.4
55	5	66.6	2976	3.79	0.8	0.7	1.01E-02	9.32E-05	0.21	3.08E+04	18
	1	5.00E-03	61.2	1.4	0.26	1.04	3.42E-03	1.38E-04	0.47	2.46E-03	55.9
55	6	68	2778	3.32	0.58	0.58	9.95E-03	8.66E-05	0.21	2.93E+04	16.7
	1	5.11E-03	61.4	1.11	0.21	0.98	3.31E-03	1.47E-04	0.44	2.41E-03	59.4
55	7	69.4	2482	2.53	0.41	0.59	9.31E-03	1.08E-04	0.18	2.67E+04	14.7
	1	5.21E-03	61.6	0.86	0.14	1.1	3.54E-03	2.01E-04	0.39	2.36E-03	61.9
55	8	70.3	2088	1.67	0.24	0.71	8.56E-03	1.83E-04	0.14	2.28E+04	11.7
	1	5.28E-03	61.7	0.6	0.07	0.97	4.12E-03	2.49E-04	0.33	2.33E-03	53.7
55	9	73	0	0	0	0					NA

run	point n [~]	p [mbar] rho [lb/ft3]	RPM [~] T [F]	T [lb] Q [ft-lb]	P [hp] Pi [hp]	Mx [in-lb] My [in-lb]	CT [~] CP [~]	CMx [~] CMy [~]	FM [~] Mtip [~]	Re.75 [~] nu [ft2/s]	V [ft/s] phi [deg]
	1	5.48E-03	62	0	0	0			0	2.25E-03	
56	1	73	0	0	0	0					NA
	1	5.48E-03	62	0	0	0			0	2.25E-03	
56	2	75.5	2087	1.95	0.26	0.13	9.35E-03	3.01E-05	0.16	2.44E+04	12.2
	1	5.66E-03	62.3	0.65	0.09	0.92	3.99E-03	2.20E-04	0.33	2.18E-03	82.2
56	3	77.1	2481	2.9	0.46	-0.17	9.63E-03	-2.73E-05	0.2	2.96E+04	14.4
	1	5.78E-03	62.4	0.98	0.16	1.33	3.42E-03	2.20E-04	0.39	2.13E-03	97.1
56	4	78.1	2778	3.84	0.67	-0.31	1.00E-02	-4.03E-05	0.23	3.36E+04	16.6
	1	5.86E-03	62.6	1.26	0.24	1.23	3.14E-03	1.60E-04	0.44	2.10E-03	104.1
56	5	79.5	2976	4.6	0.85	-0.27	1.03E-02	-2.96E-05	0.25	3.66E+04	18.3
	1	5.95E-03	62.7	1.5	0.31	1.17	3.00E-03	1.31E-04	0.47	2.07E-03	102.8
56	6	80.7	2780	4.06	0.69	-0.08	1.03E-02	-1.01E-05	0.24	3.47E+04	16.8
	1	6.05E-03	62.8	1.3	0.26	1.39	3.09E-03	1.75E-04	0.44	2.04E-03	93.3
56	7	81.7	2480	3.16	0.48	-0.16	9.91E-03	-2.52E-05	0.21	3.14E+04	14.8
	1	6.12E-03	62.9	1.02	0.18	1.13	3.31E-03	1.76E-04	0.39	2.01E-03	98.2
56	8	82.8	2087	2.23	0.28	-0.08	9.74E-03	-1.78E-05	0.18	2.67E+04	12.1
	1	6.20E-03	63	0.7	0.1	1.08	3.79E-03	2.35E-04	0.33	1.99E-03	94.3
56	9	85.7	0	0	0	0					NA
	1	6.41E-03	63.3	0	0	0			0	1.92E-03	
57	1	85.7	0	0	0	0					NA
	1	6.41E-03	63.3	0	0	0			0	1.92E-03	
57	2	87.9	2088	2.41	0.3	-0.33	9.94E-03	-6.85E-05	0.19	2.84E+04	12
	1	6.58E-03	63.5	0.76	0.11	1.03	3.71E-03	2.10E-04	0.33	1.87E-03	108
57	3	89.2	2482	3.49	0.53	-0.58	1.00E-02	-8.30E-05	0.22	3.42E+04	14.9
	1	6.67E-03	63.6	1.12	0.2	1.74	3.21E-03	2.49E-04	0.39	1.85E-03	108.4

run	point	p [mbar]	RPM [~]	T [lb]	P [hp]	Mx [in-lb]	CT [~]	CMx [~]	FM [~]	Re.75 [~]	V [ft/s]
	n [~]	rho [lb/ft3]	T [F]	Q [ft-lb]	Pi [hp]	My [in-lb]	CP [~]	CMy [~]	Mtip [~]	nu [ft2/s]	phi [deg]
57	4	90.4	2778	4.72	0.78	-1.19	1.07E-02	-1.34E-04	0.26	3.88E+04	17.4
	1	6.76E-03	63.7	1.47	0.31	1.66	3.00E-03	1.87E-04	0.43	1.82E-03	125.6
57	5	91.5	2976	5.6	0.99	-1.12	1.09E-02	-1.08E-04	0.28	4.20E+04	18.8
	1	6.84E-03	63.8	1.74	0.39	1.65	2.90E-03	1.60E-04	0.47	1.80E-03	124.1
57	6	92.5	2777	4.79	0.8	-0.64	1.06E-02	-7.04E-05	0.26	3.97E+04	17.6
	1	6.92E-03	63.8	1.5	0.31	1.56	2.98E-03	1.72E-04	0.43	1.78E-03	112.3
57	7	93.6	2481	3.68	0.56	-0.38	1.01E-02	-5.20E-05	0.23	3.59E+04	15.4
	1	7.00E-03	63.9	1.19	0.21	1.24	3.18E-03	1.69E-04	0.39	1.76E-03	107.1
57	8	94.8	2087	2.43	0.33	0.03	9.32E-03	6.10E-06	0.18	3.05E+04	12.5
	1	7.08E-03	64	0.82	0.11	1.46	3.59E-03	2.78E-04	0.33	1.74E-03	88.7
57	9	98.2	0	0	0	0					NA
	1	7.34E-03	64.2	0	0	0			0	1.68E-03	
58	1	98.2	0	0	0	0					NA
	1	7.34E-03	64.2	0	0	0			0	1.68E-03	
58	2	100.8	2087	2.67	0.36	-0.29	9.62E-03	-5.23E-05	0.19	3.24E+04	12.4
	1	7.53E-03	64.3	0.89	0.12	1.04	3.53E-03	1.87E-04	0.33	1.64E-03	105.6
58	3	101.6	2482	4.09	0.62	-1	1.03E-02	-1.26E-04	0.24	3.89E+04	15.7
	1	7.59E-03	64.4	1.31	0.23	1.19	3.11E-03	1.50E-04	0.39	1.62E-03	130.1
58	4	102.7	2778	5.43	0.89	-1.65	1.08E-02	-1.63E-04	0.27	4.40E+04	18.1
	1	7.67E-03	64.5	1.69	0.35	1.69	2.91E-03	1.67E-04	0.43	1.61E-03	134.3
58	5	104	2975	6.4	1.15	-1.79	1.10E-02	-1.53E-04	0.29	4.77E+04	19.4
	1	7.77E-03	64.5	2.02	0.45	1.78	2.84E-03	1.52E-04	0.47	1.59E-03	135.2
58	6	105.2	2778	5.6	0.91	-1.42	1.09E-02	-1.38E-04	0.28	4.51E+04	18.4
	1	7.86E-03	64.6	1.72	0.37	1.84	2.87E-03	1.79E-04	0.43	1.57E-03	127.7
58	7	106.3	2482	4.28	0.64	-0.77	1.03E-02	-9.24E-05	0.25	4.07E+04	16.2
	1	7.94E-03	64.7	1.36	0.24	1.34	3.04E-03	1.61E-04	0.39	1.55E-03	119.8

run	point	p [mbar]	RPM [~]	T [lb]	P [hp]	Mx [in-lb]	CT [~]	CMx [~]	FM [~]	Re.75 [~]	V [ft/s]
	n [~]	rho [lb/ft3]	T [F]	Q [ft-lb]	Pi [hp]	My [in-lb]	CP [~]	CMy [~]	Mtip [~]	nu [ft2/s]	phi [deg]
58	8	107.4	2087	2.73	0.38	-0.24	9.23E-03	-4.11E-05	0.18	3.45E+04	13
	1	8.02E-03	64.7	0.95	0.12	1.52	3.43E-03	2.56E-04	0.33	1.54E-03	99.1
58	9	113.7	0	0	0	0					NA
	1	8.48E-03	65	0	0	0			0	1.45E-03	
59	1	113.7	0	0	0	0					NA
	1	8.48E-03	65	0	0	0			0	1.45E-03	
59	2	116.2	2086	3.31	0.42	-0.57	1.04E-02	-8.85E-05	0.22	3.73E+04	12.7
	1	8.67E-03	65.1	1.06	0.16	1.9	3.38E-03	2.96E-04	0.33	1.42E-03	106.6
59	3	117.6	2483	5.16	0.74	-1.74	1.13E-02	-1.89E-04	0.28	4.49E+04	16.4
	1	8.77E-03	65.2	1.57	0.31	2.35	3.02E-03	2.55E-04	0.39	1.41E-03	126.5
59	4	118.6	2780	6.64	1.05	-2	1.15E-02	-1.72E-04	0.31	5.07E+04	18.6
	1	8.84E-03	65.2	1.98	0.45	2.73	2.82E-03	2.35E-04	0.43	1.39E-03	126.2
59	5	119.8	2977	8.05	1.29	-2.75	1.20E-02	-2.04E-04	0.35	5.49E+04	20
	1	8.94E-03	65.2	2.28	0.59	2.99	2.70E-03	2.22E-04	0.47	1.38E-03	132.6
59	6	121.1	2777	6.82	1.04	-2.14	1.16E-02	-1.80E-04	0.32	5.18E+04	18.6
	1	9.03E-03	65.3	1.96	0.46	2.63	2.75E-03	2.22E-04	0.43	1.37E-03	129.1
59	7	122.1	2482	5.36	0.73	-1.67	1.13E-02	-1.74E-04	0.29	4.66E+04	16.3
	1	9.11E-03	65.4	1.55	0.32	1.85	2.89E-03	1.94E-04	0.39	1.35E-03	132
59	8	123.4	2087	3.51	0.42	-0.73	1.03E-02	-1.07E-04	0.23	3.96E+04	13
	1	9.20E-03	65.4	1.07	0.17	1.93	3.20E-03	2.83E-04	0.33	1.34E-03	110.8
59	9	125.7	0	0	0	0					NA
	1	9.37E-03	65.5	0	0	0			0	1.32E-03	
60	1	125.7	0	0	0	0					NA
	1	9.37E-03	65.5	0	0	0			0	1.32E-03	
60	2	128.2	2087	3.85	0.45	-0.83	1.09E-02	-1.16E-04	0.25	4.12E+04	13.2

run	point	p [mbar]	RPM [~]	T [lb]	P [hp]	Mx [in-lb]	CT [~]	CMx [~]	FM [~]	Re.75 [~]	V [ft/s]
	n [~]	rho [lb/ft3]	T [F]	Q [ft-lb]	Pi [hp]	My [in-lb]	CP [~]	CMy [~]	Mtip [~]	nu [ft2/s]	phi [deg]
	1	9.56E-03	65.5	1.13	0.19	1.82	3.19E-03	2.56E-04	0.33	1.29E-03	114.4
60	3	129.3	2482	5.86	0.78	-1.9	1.17E-02	-1.89E-04	0.31	4.94E+04	16.3
	1	9.63E-03	65.5	1.64	0.35	2.1	2.84E-03	2.08E-04	0.39	1.28E-03	132.2
60	4	130.4	2779	7.62	1.13	-2.9	1.20E-02	-2.27E-04	0.34	5.58E+04	18.8
	1	9.72E-03	65.6	2.13	0.52	2.61	2.70E-03	2.04E-04	0.43	1.27E-03	138
60	5	131.8	2976	8.96	1.46	-2.91	1.22E-02	-1.96E-04	0.35	6.03E+04	20.5
	1	9.83E-03	65.6	2.58	0.66	2.58	2.70E-03	1.74E-04	0.46	1.26E-03	138.4
60	6	133.2	2778	7.75	1.15	-2.6	1.19E-02	-1.99E-04	0.34	5.69E+04	19.1
	1	9.93E-03	65.7	2.17	0.53	2.72	2.69E-03	2.08E-04	0.43	1.24E-03	133.7
60	7	134.9	2482	6.14	0.81	-1.92	1.17E-02	-1.82E-04	0.32	5.15E+04	16.6
	1	1.00E-02	65.8	1.72	0.37	2.07	2.81E-03	1.97E-04	0.39	1.23E-03	132.8
60	8	136.4	2089	3.9	0.48	-0.69	1.04E-02	-9.19E-05	0.24	4.38E+04	13.5
	1	1.02E-02	65.9	1.2	0.19	2.44	3.09E-03	3.24E-04	0.33	1.21E-03	105.8
60	9	138.8	0	0	0	0					NA
	1	1.03E-02	65.9	0	0	0			0	1.19E-03	
61	1	138.8	0	0	0	0					NA
	1	1.03E-02	65.9	0	0	0			0	1.19E-03	
61	2	142	2088	4.32	0.5	-0.83	1.11E-02	-1.06E-04	0.27	4.56E+04	13.5
	1	1.06E-02	65.9	1.27	0.21	1.98	3.08E-03	2.53E-04	0.33	1.17E-03	112.8
61	3	143.2	2484	6.56	0.87	-1.85	1.18E-02	-1.65E-04	0.33	5.47E+04	16.7
	1	1.07E-02	65.9	1.84	0.4	2.58	2.77E-03	2.31E-04	0.39	1.16E-03	125.5
61	4	144.5	2779	8.44	1.26	-2.68	1.20E-02	-1.90E-04	0.35	6.18E+04	19.2
	1	1.08E-02	66	2.38	0.58	3.03	2.65E-03	2.15E-04	0.43	1.15E-03	131.5
61	5	145.8	2976	10	1.57	-3.11	1.23E-02	-1.90E-04	0.37	6.67E+04	20.9
	1	1.09E-02	66	2.77	0.74	3.27	2.58E-03	2.00E-04	0.46	1.14E-03	133.5
61	6	146.7	2779	8.7	1.28	-2.75	1.22E-02	-1.92E-04	0.36	6.27E+04	19.1

run	point	p [mbar]	RPM [~]	T [lb]	P [hp]	Mx [in-lb]	CT [~]	CMx [~]	FM [~]	Re.75 [~]	V [ft/s]
	n [~]	rho [lb/ft3]	T [F]	Q [ft-lb]	Pi [hp]	My [in-lb]	CP [~]	CMy [~]	Mtip [~]	nu [ft2/s]	phi [deg]
	1	1.09E-02	66.1	2.42	0.6	3.65	2.65E-03	2.54E-04	0.43	1.13E-03	127
61	7	147.9	2482	6.85	0.89	-1.83	1.19E-02	-1.59E-04	0.34	5.64E+04	17
	1	1.10E-02	66.2	1.89	0.42	2.61	2.74E-03	2.26E-04	0.39	1.12E-03	125
61	8	149.1	2088	4.57	0.53	-0.89	1.12E-02	-1.08E-04	0.28	4.78E+04	13.6
	1	1.11E-02	66.2	1.32	0.23	2.38	3.02E-03	2.89E-04	0.33	1.11E-03	110.4
61	9	151.7	0	0	0	0					NA
	1	1.13E-02	66.3	0	0	0			0	1.09E-03	
62	1	151.7	0	0	0	0					NA
	1	1.13E-02	66.3	0	0	0			0	1.09E-03	
62	2	154.6	2087	4.84	0.56	-1.28	1.14E-02	-1.50E-04	0.28	4.96E+04	13.8
	1	1.15E-02	66.2	1.4	0.24	2.38	3.02E-03	2.78E-04	0.33	1.07E-03	118.3
62	3	155.6	2482	7.3	0.95	-2.5	1.21E-02	-2.06E-04	0.34	5.94E+04	17.2
	1	1.16E-02	66.3	2.01	0.45	2.73	2.72E-03	2.25E-04	0.39	1.06E-03	132.5
62	4	156.7	2780	9.37	1.36	-3.01	1.23E-02	-1.96E-04	0.37	6.70E+04	19.5
	1	1.17E-02	66.3	2.57	0.65	3.62	2.59E-03	2.36E-04	0.43	1.06E-03	129.7
62	5	158	2977	11	1.69	-3.58	1.25E-02	-2.02E-04	0.39	7.23E+04	20.4
	1	1.18E-02	66.3	2.98	0.83	3.53	2.52E-03	1.99E-04	0.46	1.05E-03	135.4
62	6	159.1	2778	9.5	1.37	-2.91	1.23E-02	-1.87E-04	0.37	6.79E+04	19.4
	1	1.18E-02	66.4	2.58	0.66	3.61	2.57E-03	2.32E-04	0.43	1.04E-03	128.9
62	7	160	2482	7.6	0.96	-2.35	1.23E-02	-1.88E-04	0.36	6.10E+04	17
	1	1.19E-02	66.4	2.04	0.47	2.75	2.68E-03	2.20E-04	0.39	1.04E-03	130.5
62	8	161.2	2087	5.03	0.57	-1.29	1.14E-02	-1.45E-04	0.29	5.17E+04	13.9
	1	1.20E-02	66.5	1.43	0.25	2.29	2.94E-03	2.58E-04	0.33	1.03E-03	119.3
62	9	163.7	0	0	0	0					NA
	1	1.22E-02	66.5	0	0	0			0	1.01E-03	

run	point n [~]	p [mbar] rho [lb/ft3]	RPM [~] T [F]	T [lb] Q [ft-lb]	P [hp] Pi [hp]	Mx [in-lb] My [in-lb]	CT [~] CP [~]	CMx [~] CMy [~]	FM [~] Mtip [~]	Re.75 [~] nu [ft2/s]	V [ft/s] phi [deg]
63	1	131.1	0	0	0	0					NA
	1	9.86E-03	60.8	0	0	0			0	1.24E-03	
63	2	136.2	2086	3.97	0.49	-0.78	1.06E-02	-1.02E-04	0.25	4.43E+04	12.3
	1	1.02E-02	62.1	1.23	0.19	2.08	3.13E-03	2.75E-04	0.33	1.20E-03	110.4
63	3	137.6	2482	6.09	0.84	-1.76	1.13E-02	-1.62E-04	0.31	5.32E+04	15.8
	1	1.03E-02	62.6	1.77	0.36	2.4	2.80E-03	2.22E-04	0.39	1.19E-03	126.2
63	4	138.8	2778	8.06	1.26	-2.61	1.19E-02	-1.91E-04	0.33	5.99E+04	18.1
	1	1.04E-02	63	2.39	0.55	3.19	2.76E-03	2.34E-04	0.44	1.18E-03	129.3
63	5	139.7	2976	9.62	1.5	-3.26	1.23E-02	-2.07E-04	0.37	6.45E+04	19.8
	1	1.05E-02	63.3	2.64	0.72	3.88	2.58E-03	2.46E-04	0.47	1.17E-03	130
63	6	140.7	2779	8.25	1.21	-3.01	1.20E-02	-2.18E-04	0.35	6.06E+04	18.3
	1	1.05E-02	63.6	2.3	0.57	3.03	2.64E-03	2.19E-04	0.43	1.17E-03	134.9
63	7	142.1	2483	6.41	0.86	-1.94	1.16E-02	-1.74E-04	0.32	5.46E+04	16.3
	1	1.06E-02	64.1	1.81	0.39	2.28	2.76E-03	2.05E-04	0.39	1.16E-03	130.3
63	8	143.1	2087	4.18	0.5	-1.17	1.06E-02	-1.48E-04	0.25	4.62E+04	13
	1	1.07E-02	64.3	1.26	0.2	1.99	3.04E-03	2.51E-04	0.33	1.15E-03	120.5
63	9	145.8	0	0	0	0					NA
	1	1.09E-02	64.8	0	0	0			0	1.13E-03	
64	1	145.8	0	0	0	0					NA
	1	1.09E-02	64.8	0	0	0			0	1.13E-03	
64	2	148	2088	4.52	0.53	-0.97	1.11E-02	-1.19E-04	0.27	4.77E+04	13.7
	1	1.10E-02	65.1	1.33	0.22	2.06	3.05E-03	2.51E-04	0.33	1.11E-03	115.3
64	3	149	2483	6.88	0.91	-2.18	1.19E-02	-1.87E-04	0.33	5.71E+04	16.7
	1	1.11E-02	65.2	1.91	0.42	2.47	2.74E-03	2.12E-04	0.39	1.11E-03	131.4
64	4	150	2779	8.91	1.29	-2.9	1.22E-02	-1.97E-04	0.37	6.43E+04	19.2

run	point	p [mbar]	RPM [~]	T [lb]	P [hp]	Mx [in-lb]	CT [~]	CMx [~]	FM [~]	Re.75 [~]	V [ft/s]
	n [~]	rho [lb/ft3]	T [F]	Q [ft-lb]	Pi [hp]	My [in-lb]	CP [~]	CMy [~]	Mtip [~]	nu [ft2/s]	phi [deg]
	1	1.12E-02	65.3	2.44	0.62	3.17	2.60E-03	2.16E-04	0.43	1.10E-03	132.4
64	5	150.9	2976	10.44	1.61	-3.21	1.24E-02	-1.89E-04	0.38	6.92E+04	20.8
	1	1.12E-02	65.4	2.84	0.78	3.37	2.54E-03	1.99E-04	0.47	1.09E-03	133.6
64	6	151.9	2779	9.06	1.3	-2.95	1.22E-02	-1.98E-04	0.37	6.51E+04	19.4
	1	1.13E-02	65.5	2.46	0.63	3.3	2.58E-03	2.22E-04	0.43	1.09E-03	131.7
64	7	152.9	2482	7.09	0.91	-2.04	1.19E-02	-1.71E-04	0.34	5.84E+04	17
	1	1.14E-02	65.7	1.93	0.43	2.5	2.70E-03	2.10E-04	0.39	1.08E-03	129.1
64	8	154.2	2086	4.69	0.53	-1.21	1.11E-02	-1.42E-04	0.28	4.95E+04	14
	1	1.15E-02	65.9	1.35	0.23	2.18	2.96E-03	2.56E-04	0.33	1.07E-03	119
64	9	156.7	0	0	0	0					NA
	1	1.17E-02	66	0	0	0			0	1.06E-03	
65	1	156.7	0	0	0	0					NA
	1	1.17E-02	66	0	0	0			0	1.06E-03	
65	2	159.5	2088	4.92	0.57	-0.63	1.12E-02	-7.12E-05	0.28	5.12E+04	13.8
	1	1.19E-02	66.1	1.42	0.25	2.32	2.96E-03	2.63E-04	0.33	1.04E-03	105.1
65	3	160.6	2483	7.46	0.97	-1.8	1.20E-02	-1.43E-04	0.35	6.14E+04	17.2
	1	1.20E-02	66.2	2.04	0.46	2.94	2.67E-03	2.35E-04	0.39	1.03E-03	121.4
65	4	161.6	2780	9.62	1.4	-2.91	1.22E-02	-1.84E-04	0.37	6.91E+04	19.2
	1	1.20E-02	66.2	2.64	0.67	3.35	2.57E-03	2.12E-04	0.43	1.02E-03	131
65	5	162.5	2976	11.17	1.73	-3.07	1.23E-02	-1.68E-04	0.39	7.44E+04	21
	1	1.21E-02	66.3	3.04	0.83	3.26	2.50E-03	1.79E-04	0.46	1.02E-03	133.3
65	6	163.6	2777	9.77	1.4	-3.22	1.23E-02	-2.01E-04	0.38	6.98E+04	19.6
	1	1.22E-02	66.4	2.66	0.68	3.28	2.56E-03	2.05E-04	0.43	1.01E-03	134.5
65	7	165.6	2482	7.68	1	-2.32	1.20E-02	-1.79E-04	0.35	6.32E+04	17.3
	1	1.23E-02	66.5	2.11	0.47	2.47	2.65E-03	1.91E-04	0.39	1.00E-03	133.2
65	8	166.7	2087	5.08	0.58	-1.21	1.11E-02	-1.31E-04	0.29	5.34E+04	14.1

run	point	p [mbar]	RPM [~]	T [lb]	P [hp]	Mx [in-lb]	CT [~]	CMx [~]	FM [~]	Re.75 [~]	V [ft/s]
	n [~]	rho [lb/ft3]	T [F]	Q [ft-lb]	Pi [hp]	My [in-lb]	CP [~]	CMy [~]	Mtip [~]	nu [ft2/s]	phi [deg]
	1	1.24E-02	66.6	1.47	0.25	2.23	2.89E-03	2.43E-04	0.33	9.94E-04	118.4
65	9	169.9	0	0	0	0					NA
	1	1.26E-02	66.7	0	0	0			0	9.75E-04	
66	1	169.9	0	0	0	0					NA
	1	1.26E-02	66.7	0	0	0			0	9.75E-04	
66	2	172.3	2087	5.39	0.62	-1.05	1.14E-02	-1.11E-04	0.3	5.53E+04	13.9
	1	1.28E-02	66.7	1.55	0.27	2.22	2.90E-03	2.33E-04	0.33	9.61E-04	115.4
66	3	173.5	2483	8.18	1.05	-2.61	1.21E-02	-1.93E-04	0.36	6.62E+04	17.6
	1	1.29E-02	66.7	2.22	0.51	2.73	2.63E-03	2.02E-04	0.39	9.55E-04	133.7
66	4	174.3	2779	10.57	1.49	-3.35	1.25E-02	-1.96E-04	0.39	7.44E+04	19.7
	1	1.30E-02	66.7	2.82	0.74	3.49	2.52E-03	2.05E-04	0.43	9.51E-04	133.8
66	5	175.4	2976	12.29	1.91	-3.67	1.26E-02	-1.86E-04	0.4	8.02E+04	21.2
	1	1.30E-02	66.8	3.38	0.93	3.5	2.52E-03	1.78E-04	0.46	9.45E-04	136.4
66	6	176.2	2779	10.69	1.51	-2.95	1.25E-02	-1.71E-04	0.39	7.52E+04	19.5
	1	1.31E-02	66.8	2.84	0.75	3.57	2.50E-03	2.07E-04	0.43	9.41E-04	129.6
66	7	177.3	2482	8.35	1.06	-2.17	1.22E-02	-1.57E-04	0.37	6.76E+04	17.3
	1	1.32E-02	66.9	2.23	0.52	2.83	2.59E-03	2.05E-04	0.39	9.35E-04	127.4
66	8	178.4	2088	5.62	0.63	-1.41	1.15E-02	-1.43E-04	0.31	5.72E+04	14.1
	1	1.33E-02	67	1.58	0.28	2.35	2.84E-03	2.39E-04	0.33	9.29E-04	120.9
66	9	181	0	0	0	0					NA
	1	1.35E-02	67	0	0	0			0	9.16E-04	
67	1	181	0	0	0	0					NA
	1	1.35E-02	67	0	0	0			0	9.16E-04	
67	2	183.7	2087	5.84	0.65	-1.44	1.16E-02	-1.42E-04	0.31	5.89E+04	14.5
	1	1.37E-02	67	1.63	0.3	2.61	2.82E-03	2.58E-04	0.33	9.03E-04	118.9

run	point	p [mbar]	RPM [~]	T [lb]	P [hp]	Mx [in-lb]	CT [~]	CMx [~]	FM [~]	Re.75 [~]	V [ft/s]
	n [~]	rho [lb/ft3]	T [F]	Q [ft-lb]	Pi [hp]	My [in-lb]	CP [~]	CMy [~]	Mtip [~]	nu [ft2/s]	phi [deg]
67	3	184.9	2482	8.73	1.11	-2.7	1.22E-02	-1.87E-04	0.37	7.05E+04	17.7
	1	1.37E-02	67.1	2.35	0.54	3.45	2.58E-03	2.39E-04	0.39	8.97E-04	128
67	4	185.8	2779	11.58	1.58	-4.25	1.28E-02	-2.34E-04	0.42	7.92E+04	20.1
	1	1.38E-02	67.1	2.99	0.82	4.03	2.47E-03	2.22E-04	0.43	8.93E-04	136.5
67	5	186.7	2977	13.51	1.97	-4.65	1.30E-02	-2.22E-04	0.43	8.53E+04	21.3
	1	1.39E-02	67.1	3.48	1.03	4.72	2.43E-03	2.26E-04	0.46	8.88E-04	134.6
67	6	188	2779	11.66	1.6	-4.24	1.28E-02	-2.31E-04	0.41	8.02E+04	19.9
	1	1.40E-02	67.2	3.03	0.83	3.85	2.47E-03	2.10E-04	0.43	8.82E-04	137.7
67	7	188.9	2484	9.1	1.13	-3.09	1.24E-02	-2.10E-04	0.38	7.20E+04	17.7
	1	1.40E-02	67.2	2.4	0.57	3.11	2.56E-03	2.11E-04	0.39	8.78E-04	134.9
67	8	189.9	2087	6.09	0.67	-1.8	1.17E-02	-1.72E-04	0.32	6.08E+04	14.5
	1	1.41E-02	67.3	1.68	0.31	2.53	2.78E-03	2.42E-04	0.33	8.74E-04	125.5
67	9	192.4	0	0	0	0					NA
	1	1.43E-02	67.3	0	0	0			0	8.62E-04	
68	1	192.4	0	0	0	0					NA
	1	1.43E-02	67.3	0	0	0			0	8.62E-04	
68	2	194.4	2087	6.32	0.69	-1.15	1.19E-02	-1.07E-04	0.33	6.22E+04	14.5
	1	1.44E-02	67.3	1.74	0.32	2.9	2.79E-03	2.71E-04	0.33	8.54E-04	111.6
68	3	195.4	2483	9.45	1.17	-2.53	1.25E-02	-1.66E-04	0.39	7.44E+04	17.5
	1	1.45E-02	67.3	2.48	0.59	3.78	2.54E-03	2.48E-04	0.39	8.49E-04	123.8
68	4	196.3	2779	12.2	1.7	-4.02	1.28E-02	-2.10E-04	0.41	8.37E+04	19.5
	1	1.46E-02	67.4	3.22	0.87	4.05	2.48E-03	2.11E-04	0.43	8.45E-04	134.8
68	5	197.2	2976	14.34	2.09	-5.03	1.31E-02	-2.28E-04	0.44	9.00E+04	21.6
	1	1.46E-02	67.4	3.69	1.1	5.08	2.41E-03	2.30E-04	0.46	8.41E-04	134.7
68	6	199.9	2779	12.29	1.7	-3.09	1.27E-02	-1.59E-04	0.41		19.9
	1	1.48E-02	67.5	3.21	0.87	4.14	2.44E-03	2.12E-04	0.43		126.7

run	point	p [mbar]	RPM [~]	T [lb]	P [hp]	Mx [in-lb]	CT [~]	CMx [~]	FM [~]	Re.75 [~]	V [ft/s]
	n [~]	rho [lb/ft3]	T [F]	Q [ft-lb]	Pi [hp]	My [in-lb]	CP [~]	CMy [~]	Mtip [~]	nu [ft2/s]	phi [deg]
68	7	201.1	2483	9.76	1.2	-2.07	1.25E-02	-1.32E-04	0.39	7.66E+04	17.5
	1	1.49E-02	67.4	2.54	0.61	3.51	2.52E-03	2.24E-04	0.39	8.25E-04	120.5
68	8	202	2085	6.62	0.7	-1.23	1.20E-02	-1.11E-04	0.34	6.46E+04	14.5
	1	1.50E-02	67.5	1.77	0.34	2.9	2.73E-03	2.61E-04	0.33	8.21E-04	112.9
68	9	205.1	0	0	0	0					NA
	1	1.52E-02	67.5	0	0	0			0	8.09E-04	
69	1	205.1	0	0	0	0					NA
	1	1.52E-02	67.5	0	0	0			0	8.09E-04	
69	2	236.3	2088	-0.81	-0.34	-0.35	-1.26E-03	-2.68E-05	0.36	7.58E+04	32.1
	1	1.75E-02	67.5	0	-0.01	0.33	-8.80E-05	2.51E-05	0.33	7.02E-04	-43.2
69	3	280.1	2089	-0.32	-0.32	-0.23	-4.16E-04	-1.52E-05	0.12	8.96E+04	17.2
	1	2.08E-02	68.7	0	0	0.1	-5.06E-05	6.28E-06	0.33	5.94E-04	-22.5
69	4	312	0	0	0	0					NA
	1	2.31E-02	70.2	0	0	0			0	5.35E-04	
70	1	312	0	0	0	0					NA
	1	2.31E-02	70.2	0	0	0			0	5.35E-04	
70	2	258.3	2977	10.92	1.15	-6.3	7.67E-03	-2.20E-04	0.41	1.16E+05	NA
	1	1.90E-02	72.8	2.03	0.64	4.37	1.17E-03	1.53E-04	0.46	6.53E-04	145.2
70	3	234.7	2977	9.41	0.98	-6.47	7.25E-03	-2.48E-04	0.38	1.06E+05	NA
	1	1.73E-02	71.2	1.74	0.54	3.17	1.14E-03	1.22E-04	0.46	7.14E-04	153.9
70	4	215.4	2977	8.28	0.97	-7.14	6.92E-03	-2.97E-04	0.33	9.81E+04	NA
	1	1.59E-02	68.9	1.72	0.46	2.67	1.23E-03	1.11E-04	0.46	7.72E-04	159.5
70	5	196.5	2977	7.12	0.72	-7.66	6.49E-03	-3.47E-04	0.34	9.04E+04	NA
	1	1.46E-02	66.1	1.26	0.39	2.03	1.09E-03	9.20E-05	0.46	8.38E-04	165.2
70	6	180.6	2977	6.16	0.62	-7.99	6.09E-03	-3.92E-04	0.31	8.38E+04	NA

run	point	p [mbar]	RPM [~]	T [lb]	P [hp]	Mx [in-lb]	CT [~]	CMx [~]	FM [~]	Re.75 [~]	V [ft/s]
	n [~]	rho [lb/ft3]	T [F]	Q [ft-lb]	Pi [hp]	My [in-lb]	CP [~]	CMy [~]	Mtip [~]	nu [ft2/s]	phi [deg]
	1	1.35E-02	63.3	1.09	0.32	1.3	1.08E-03	6.39E-05	0.47	9.04E-04	170.8
70	7	166.5	2977	5.23	0.52	-7.64	5.57E-03	-4.05E-04	0.28	7.80E+04	NA
	1	1.25E-02	60.7	0.92	0.26	0.74	1.06E-03	3.94E-05	0.47	9.72E-04	174.4
70	8	154	2977	4.38	0.43	-7.45	5.02E-03	-4.24E-04	0.24	7.27E+04	NA
	1	1.16E-02	58.5	0.76	0.21	0.43	1.03E-03	2.45E-05	0.47	1.04E-03	176.7
70	9	139.4	2977	3.56	0.36	-7.43	4.49E-03	-4.66E-04	0.2	6.63E+04	NA
	1	1.06E-02	56	0.64	0.16	-0.28	1.05E-03	-1.74E-05	0.47	1.14E-03	-177.9
70	10	129.1	2977	2.89	0.3	-7.31	3.93E-03	-4.93E-04	0.17	6.18E+04	NA
	1	9.83E-03	54.3	0.53	0.12	-0.46	1.04E-03	-3.12E-05	0.47	1.23E-03	-176.4
70	11	116	2977	2.2	0.25	-6.86	3.27E-03	-5.07E-04	0.13	5.65E+04	NA
	1	8.86E-03	52.6	0.44	0.08	-1.01	1.05E-03	-7.50E-05	0.47	1.34E-03	-171.6
70	12	107.2	2977	1.79	0.31	-6.52	2.86E-03	-5.19E-04	0.09	5.25E+04	NA
	1	8.21E-03	51.5	0.55	0.06	-1.31	1.24E-03	-1.04E-04	0.47	1.44E-03	-168.7
70	13	99.3	2977	1.4	0.18	-6.06	2.41E-03	-5.19E-04	0.08	4.88E+04	NA
	1	7.62E-03	50.6	0.31	0.05	-1.27	1.09E-03	-1.09E-04	0.47	1.55E-03	-168.1
70	14	89.3	2977	0.75	0.12	-5.44	1.49E-03	-5.35E-04	0.04	4.26E+04	NA
	1	6.86E-03	49.7	0.22	0.02	-1.46	1.14E-03	-1.44E-04	0.47	1.78E-03	-165
70	15	76	2977	0.04	0.04	-5.1	9.82E-05	-5.65E-04	0	3.79E+04	NA
	1	5.85E-03	49	0.08	0	-1.58	1.10E-03	-1.75E-04	0.47	2.00E-03	-162.8
70	16	68	2977	-0.41	0	-4.7	-1.02E-03	-5.84E-04	-0.02	3.38E+04	NA
	1	5.24E-03	48.1	0	-0.01	-1.74	1.12E-03	-2.16E-04	0.47	2.24E-03	20.3
70	17	59.3	2977	-0.77	-0.05	-4.43	-2.23E-03	-6.39E-04	-0.07	2.91E+04	NA
	1	4.58E-03	47.3	-0.09	-0.02	-1.84	1.14E-03	-2.65E-04	0.47	2.60E-03	22.6
70	18	51.7	2977	-0.97	-0.07	-4.17	-3.16E-03	-6.79E-04	-0.1	2.58E+04	NA
	1	4.00E-03	46.6	-0.12	-0.04	-1.79	1.22E-03	-2.91E-04	0.47	2.93E-03	23.2
70	19	46.7	2977	-0.98	-0.08	-3.93	-3.53E-03	-7.04E-04	-0.11	2.35E+04	16.4
	1	3.61E-03	46	-0.14	-0.04	-1.83	1.30E-03	-3.28E-04	0.47	3.23E-03	25

run	point	p [mbar]	RPM [~]	T [lb]	P [hp]	Mx [in-lb]	CT [~]	CMx [~]	FM [~]	Re.75 [~]	V [ft/s]
	n [~]	rho [lb/ft3]	T [F]	Q [ft-lb]	Pi [hp]	My [in-lb]	CP [~]	CMy [~]	Mtip [~]	nu [ft2/s]	phi [deg]
70	20	43.3	2977	-0.9	-0.07	-3.6	-3.51E-03	-6.99E-04	-0.1	2.16E+04	42.2
	1	3.36E-03	45.5	-0.13	-0.04	-1.7	1.45E-03	-3.31E-04	0.47	3.50E-03	25.3
70	21	39.7	2977	-0.71	0.04	-3.25	-3.01E-03	-6.82E-04	-0.06	2.00E+04	60.2
	1	3.08E-03	45.3	0.07	-0.03	-1.75	2.06E-03	-3.68E-04	0.47	3.78E-03	28.4
70	22	36.7	2977	-0.49	-0.02	-2.6	-2.24E-03	-5.87E-04	-0.04	1.86E+04	74.7
	1	2.84E-03	45.4	-0.04	-0.02	-1.61	1.93E-03	-3.63E-04	0.47	4.07E-03	31.8
70	23	33.3	2977	-0.1	0.03	-1.68	-4.85E-04	-4.14E-04	0	1.70E+04	94.8
	1	2.58E-03	45.9	0.05	0	-1.31	2.35E-03	-3.23E-04	0.47	4.45E-03	37.9
70	24	28.5	2977	-0.05	0.02	-1.3	-2.80E-04	-3.95E-04	0	1.37E+04	NA
	1	2.21E-03	46.4	0.04	0	-1.18	2.87E-03	-3.59E-04	0.47	5.52E-03	42.3
70	25	23.1	2977	0.02	0.02	-0.95	1.50E-04	-3.64E-04	0	1.08E+04	NA
	1	1.78E-03	46.6	0.03	0	-1.09	3.61E-03	-4.19E-04	0.47	7.00E-03	-131
70	26	17.1	2977	0.26	0.03	-0.33	2.78E-03	-1.77E-04	0.02	7.67E+03	NA
	1	1.32E-03	46.3	0.05	0.01	-0.82	5.22E-03	-4.46E-04	0.47	9.89E-03	-111.6
70	27	14.4	2977	0.52	0.06	0.13	7.05E-03	8.94E-05	0.06	6.17E+03	NA
	1	1.11E-03	46.1	0.1	0.03	-0.72	6.81E-03	-4.82E-04	0.47	1.23E-02	-79.5
70	28	11.9	0	0	0	0					NA
	1	9.19E-04	45.9	0	0	0			0	1.65E-02	
71	1	11.9	0	0	0	0					NA
	1	9.19E-04	45.9	0	0	0			0	1.65E-02	
71	2	10	2976	0.39	0.07	0.61	9.16E-03	7.19E-04	0.05	3.46E+03	71.1
	1	7.74E-04	45.9	0.13	0.02	0.63	1.24E-02	7.37E-04	0.47	2.19E-02	45.7
71	3	9.3	2977	0.36	0.06	0.94	1.01E-02	1.29E-03	0.05	2.94E+03	194
	1	7.19E-04	48.8	0.11	0.02	0.48	1.42E-02	6.64E-04	0.47	2.57E-02	27.3
71	4	9.1	0	0	0	0					NA
	1	6.97E-04	49.2	0	0	0			0	2.87E-02	

run	point n [~]	p [mbar] rho [lb/ft3]	RPM [~] T [F]	T [lb] Q [ft-lb]	P [hp] Pi [hp]	Mx [in-lb] My [in-lb]	CT [~] CP [~]	CMx [~] CMy [~]	FM [~] Mtip [~]	Re.75 [~] nu [ft2/s]	V [ft/s] phi [deg]
72	1	9.1	0	0	0	0					NA
	1	6.97E-04	49.2	0	0	0			0	2.87E-02	
72	2	8.7	2977	0.25	0.05	0.28	8.03E-03	4.51E-04	0.03	2.48E+03	24.5
	1	6.66E-04	49.3	0.09	0.01	0.25	1.62E-02	4.10E-04	0.47	3.06E-02	42.3
72	3	8.7	2977	0.27	0.05	0.66	9.01E-03	1.10E-03	0.04	2.38E+03	22.5
	1	6.66E-04	49.4	0.09	0.02	0.29	1.68E-02	4.86E-04	0.47	3.18E-02	23.8
72	4	8.7	2977	0.31	0.04	0.98	1.08E-02	1.68E-03	0.05	2.30E+03	13.3
	1	6.62E-04	53.1	0.07	0.02	0.29	1.70E-02	5.05E-04	0.47	3.30E-02	16.7
72	5	8.7	0	0	0	0					NA
	1	6.62E-04	52.8	0	0	0			0	3.31E-02	
73	1	8.7	0	0	0	0					NA
	1	6.62E-04	52.8	0	0	0			0	3.31E-02	
73	2	8.7	1858	0.13	-0.02	0.81	1.16E-02	3.58E-03	0.02	1.43E+03	NA
	1	6.62E-04	52.9	-0.05	0.01	-0.41	3.74E-02	-1.81E-03	0.29	3.30E-02	-26.8
73	3	8.7	2088	0.05	-0.01	0.57	3.87E-03	2.01E-03	0.01	1.61E+03	NA
	1	6.62E-04	52.9	-0.02	0	0.18	3.08E-02	6.48E-04	0.33	3.30E-02	17.9
73	4	8.7	2481	0.05	0.01	0.62	2.60E-03	1.55E-03	0	1.91E+03	NA
	1	6.62E-04	52.9	0.01	0	0.14	2.26E-02	3.42E-04	0.39	3.31E-02	12.5
73	5	8.7	2778	0.16	0.03	0.54	6.38E-03	1.07E-03	0.02	2.12E+03	NA
	1	6.58E-04	56.2	0.05	0.01	0.24	1.91E-02	4.71E-04	0.44	3.33E-02	23.8
73	6	8.7	2977	0.41	0.04	0.62	1.42E-02	1.08E-03	0.07	2.28E+03	NA
	1	6.59E-04	55.4	0.07	0.03	0.21	1.69E-02	3.68E-04	0.47	3.32E-02	18.7
73	7	8.7	2779	0.28	0.02	0.99	1.12E-02	1.97E-03	0.04	2.13E+03	NA
	1	6.59E-04	55.3	0.04	0.02	0.44	1.89E-02	8.75E-04	0.44	3.32E-02	23.9
73	8	8.7	2483	0.2	0.01	1.29	1.02E-02	3.21E-03	0.03	1.90E+03	NA

run	point	p [mbar]	RPM [~]	T [lb]	P [hp]	Mx [in-lb]	CT [~]	CMx [~]	FM [~]	Re.75 [~]	V [ft/s]
	n [~]	rho [lb/ft3]	T [F]	Q [ft-lb]	Pi [hp]	My [in-lb]	CP [~]	CMy [~]	Mtip [~]	nu [ft2/s]	phi [deg]
	1	6.59E-04	55.3	0.01	0.01	0.3	2.28E-02	7.47E-04	0.39	3.32E-02	13.1
73	9	8.7	2087	0.28	-0.01	0.99	2.00E-02	3.51E-03	0.06	1.60E+03	NA
	1	6.59E-04	55.5	-0.02	0.02	0.42	3.08E-02	1.49E-03	0.33	3.32E-02	23.1
73	10	8.7	1858	0.37	-0.02	0.96	3.28E-02	4.29E-03	0.11	1.43E+03	NA
	1	6.58E-04	55.7	-0.05	0.03	-0.12	3.71E-02	-5.24E-04	0.29	3.32E-02	-7
73	11	8.7	0	0	0	0					NA
	1	6.58E-04	55.9	0	0	0			0	3.32E-02	
74	1	15.3	0	0	0	0					NA
	1	1.16E-03	59.9	0	0	0			0	1.14E-02	
74	2	14.7	2977	0.85	0.14	0.45	1.11E-02	2.94E-04	0.11	6.31E+03	35.9
	1	1.11E-03	59.5	0.25	0.06	0.48	7.78E-03	3.10E-04	0.47	1.20E-02	46.5
74	3	14	2977	0.81	0.13	0.52	1.07E-02	3.41E-04	0.1	6.22E+03	6
	1	1.06E-03	59.2	0.23	0.06	0.6	7.71E-03	3.92E-04	0.47	1.22E-02	49
74	4	14	2977	0.77	0.14	0.56	1.00E-02	3.63E-04	0.09	6.29E+03	30.1
	1	1.06E-03	59.1	0.24	0.05	0.72	7.72E-03	4.69E-04	0.47	1.20E-02	52.2
74	5	14	0	0	0	0					NA
	1	1.06E-03	59.1	0	0	0			0	1.20E-02	
75	1	14	0	0	0	0					NA
	1	1.06E-03	59.1	0	0	0			0	1.20E-02	
75	2	14	2087	0.27	0.02	0.68	7.09E-03	8.89E-04	0.03	4.44E+03	51
	1	1.06E-03	59.3	0.06	0.01	0.72	1.27E-02	9.42E-04	0.33	1.20E-02	46.7
75	3	14	2482	0.3	0.06	0.76	5.60E-03	7.04E-04	0.03	5.28E+03	53.1
	1	1.06E-03	59.4	0.13	0.01	0.83	9.71E-03	7.65E-04	0.39	1.20E-02	47.4
75	4	14	2780	0.49	0.1	0.72	7.23E-03	5.27E-04	0.05	5.92E+03	51.4
	1	1.06E-03	59.6	0.19	0.03	0.84	8.25E-03	6.17E-04	0.44	1.20E-02	49.5

run	point	p [mbar]	RPM [~]	T [lb]	P [hp]	Mx [in-lb]	CT [~]	CMx [~]	FM [~]	Re.75 [~]	V [ft/s]
	n [~]	rho [lb/ft3]	T [F]	Q [ft-lb]	Pi [hp]	My [in-lb]	CP [~]	CMy [~]	Mtip [~]	nu [ft2/s]	phi [deg]
75	5	14	2976	0.64	0.14	0.8	8.29E-03	5.12E-04	0.07	6.33E+03	48.9
	1	1.06E-03	59.7	0.22	0.04	0.36	7.73E-03	2.34E-04	0.47	1.20E-02	24.6
75	6	14	2778	0.52	0.1	1.07	7.72E-03	7.90E-04	0.06	5.91E+03	41.7
	1	1.05E-03	59.8	0.18	0.03	0.91	8.26E-03	6.73E-04	0.44	1.20E-02	40.4
75	7	14	2483	0.38	0.06	1.27	7.01E-03	1.17E-03	0.04	5.28E+03	36.6
	1	1.05E-03	59.9	0.15	0.02	0.8	9.65E-03	7.36E-04	0.39	1.20E-02	32.2
75	8	14	2086	0.29	0.02	1.29	7.55E-03	1.69E-03	0.04	4.44E+03	29.3
	1	1.05E-03	60	0.08	0.01	0.61	1.26E-02	7.89E-04	0.33	1.20E-02	25.1
75	9	14	0	0	0	0					NA
	1	1.05E-03	60.2	0	0	0			0	1.20E-02	
76	1	28.3	0	0	0	0					NA
	1	2.12E-03	62.7	0	0	0			0	5.63E-03	
76	2	28.3	2977	1.49	0.32	0.41	8.82E-03	1.19E-04	0.13	1.39E+04	NA
	1	2.12E-03	63.3	0.56	0.09	0.59	4.60E-03	1.74E-04	0.47	5.45E-03	55.6
76	3	28.7	2977	1.48	0.32	0.54	8.71E-03	1.57E-04	0.12	1.39E+04	NA
	1	2.14E-03	63.5	0.57	0.09	0.77	4.64E-03	2.25E-04	0.47	5.44E-03	55.1
76	4	28.4	2977	1.44	0.32	0.58	8.65E-03	1.74E-04	0.12	1.37E+04	NA
	1	2.12E-03	63.5	0.57	0.09	0.9	4.70E-03	2.66E-04	0.47	5.53E-03	56.9
76	5	28.4	0	0	0	0					NA
	1	2.12E-03	63.5	0	0	0			0	5.52E-03	
77	1	28.4	0	0	0	0					NA
	1	2.12E-03	63.5	0	0	0			0	5.52E-03	
77	2	28.4	2089	0.62	0.09	0.55	7.44E-03	3.28E-04	0.07	9.79E+03	19.5
	1	2.13E-03	63.3	0.21	0.03	0.71	6.86E-03	4.22E-04	0.33	5.43E-03	52.2
77	3	28.4	2481	0.88	0.16	0.31	7.41E-03	1.29E-04	0.08	1.16E+04	22.4

run	point	p [mbar]	RPM [~]	T [lb]	P [hp]	Mx [in-lb]	CT [~]	CMx [~]	FM [~]	Re.75 [~]	V [ft/s]
	n [~]	rho [lb/ft3]	T [F]	Q [ft-lb]	Pi [hp]	My [in-lb]	CP [~]	CMy [~]	Mtip [~]	nu [ft2/s]	phi [deg]
	1	2.13E-03	63.3	0.34	0.04	0.84	5.51E-03	3.51E-04	0.39	5.43E-03	69.9
77	4	28.4	2779	1.1	0.24	0.36	7.48E-03	1.22E-04	0.09	1.30E+04	NA
	1	2.13E-03	63.2	0.46	0.06	1.12	4.88E-03	3.76E-04	0.44	5.46E-03	72
77	5	28.4	2976	1.34	0.31	0.46	8.00E-03	1.38E-04	0.11	1.37E+04	NA
	1	2.13E-03	63.2	0.54	0.08	0.72	4.61E-03	2.15E-04	0.47	5.53E-03	57.4
77	6	28.4	2779	1.13	0.24	0.57	7.66E-03	1.94E-04	0.1	1.29E+04	46
	1	2.13E-03	63.1	0.46	0.06	1.19	4.90E-03	4.01E-04	0.44	5.47E-03	64.2
77	7	28.4	2482	0.89	0.17	0.67	7.47E-03	2.80E-04	0.08	1.17E+04	50.7
	1	2.13E-03	63.1	0.35	0.04	0.94	5.52E-03	3.91E-04	0.39	5.39E-03	54.4
77	8	28.4	2086	0.58	0.09	0.78	6.88E-03	4.64E-04	0.06	9.80E+03	31.3
	1	2.13E-03	63.1	0.22	0.02	0.77	6.88E-03	4.56E-04	0.33	5.42E-03	44.5
77	9	28.4	0	0	0	0					NA
	1	2.13E-03	63.1	0	0	0			0	5.60E-03	
78	1	28.4	0	0	0	0					NA
	1	2.13E-03	63.1	0	0	0			0	5.60E-03	
78	2	28.3	2087	0.61	0.09	0.37	7.28E-03	2.20E-04	0.06	9.80E+03	58.5
	1	2.12E-03	63.1	0.21	0.02	0.48	6.86E-03	2.83E-04	0.33	5.42E-03	52.1
78	3	28.3	2482	0.87	0.16	0.3	7.35E-03	1.25E-04	0.08	1.16E+04	38
	1	2.12E-03	63.2	0.34	0.04	0.77	5.51E-03	3.24E-04	0.39	5.43E-03	68.8
78	4	28.7	2779	1.09	0.25	0.39	7.38E-03	1.31E-04	0.09	1.30E+04	33.5
	1	2.15E-03	63.2	0.47	0.06	0.85	4.90E-03	2.86E-04	0.44	5.44E-03	65.4
78	5	28.7	2976	1.37	0.29	0.45	8.08E-03	1.33E-04	0.11	1.39E+04	31.2
	1	2.15E-03	63.3	0.52	0.08	0.5	4.58E-03	1.47E-04	0.47	5.44E-03	47.9
78	6	28.7	2778	1.12	0.24	0.62	7.56E-03	2.09E-04	0.1	1.30E+04	28.4
	1	2.15E-03	63.3	0.45	0.06	1	4.88E-03	3.38E-04	0.44	5.44E-03	58.3
78	7	28.7	2481	0.89	0.17	0.71	7.52E-03	2.98E-04	0.08	1.16E+04	25.6

run	point	p [mbar]	RPM [~]	T [lb]	P [hp]	Mx [in-lb]	CT [~]	CMx [~]	FM [~]	Re.75 [~]	V [ft/s]
	n [~]	rho [lb/ft3]	T [F]	Q [ft-lb]	Pi [hp]	My [in-lb]	CP [~]	CMy [~]	Mtip [~]	nu [ft2/s]	phi [deg]
	1	2.15E-03	63.3	0.36	0.04	0.75	5.51E-03	3.17E-04	0.39	5.45E-03	46.8
78	8	28.7	2087	0.61	0.09	0.93	7.35E-03	5.55E-04	0.07	9.74E+03	19.8
	1	2.15E-03	63.4	0.23	0.02	0.65	6.84E-03	3.89E-04	0.33	5.45E-03	35
78	9	28.7	0	0	0	0					NA
	1	2.15E-03	63.4	0	0	0			0	5.45E-03	
79	1	13.7	0	0	0	0					NA
	1	1.03E-03	60.4	0	0	0			0	1.25E-02	
79	2	13.7	2977	0.73	0.14	0.38	9.88E-03	2.53E-04	0.09	6.02E+03	70.4
	1	1.03E-03	59.9	0.25	0.05	0.07	8.11E-03	4.96E-05	0.47	1.26E-02	11.1
79	3	13.7	2977	0.74	0.13	0.54	9.95E-03	3.58E-04	0.09	6.07E+03	83.7
	1	1.03E-03	60	0.23	0.05	0.16	7.85E-03	1.09E-04	0.47	1.25E-02	17
79	4	13.7	2978	0.75	0.14	0.57	1.01E-02	3.80E-04	0.09	6.08E+03	70.2
	1	1.03E-03	60.2	0.25	0.05	0.21	7.98E-03	1.42E-04	0.47	1.25E-02	20.4
79	5	13.7	0	0	0	0					NA
	1	1.03E-03	60.5	0	0	0			0	1.24E-02	
80	1	17.6	0	0	0	0					NA
	1	1.32E-03	62.5	0	0	0			0	8.82E-03	
80	2	20	2087	0.5	0.05	0.37	8.43E-03	3.08E-04	0.06	6.93E+03	13.7
	1	1.50E-03	63.2	0.12	0.02	0.39	8.67E-03	3.23E-04	0.33	7.67E-03	46.4
80	3	21.1	2482	0.68	0.11	0.6	7.64E-03	3.38E-04	0.07	8.63E+03	15.5
	1	1.58E-03	63.5	0.23	0.03	0.68	6.61E-03	3.83E-04	0.39	7.33E-03	48.6
80	4	22	2778	0.92	0.19	0.54	7.84E-03	2.30E-04	0.09	1.02E+04	14.4
	1	1.65E-03	63.8	0.35	0.05	0.81	5.61E-03	3.45E-04	0.43	6.93E-03	56.3
80	5	23.3	2976	1.22	0.25	0.62	8.61E-03	2.18E-04	0.11	1.15E+04	13.5

run	point	p [mbar]	RPM [~]	T [lb]	P [hp]	Mx [in-lb]	CT [~]	CMx [~]	FM [~]	Re.75 [~]	V [ft/s]
	n [~]	rho [lb/ft3]	T [F]	Q [ft-lb]	Pi [hp]	My [in-lb]	CP [~]	CMy [~]	Mtip [~]	nu [ft2/s]	phi [deg]
	1	1.74E-03	64.1	0.45	0.08	0.56	5.04E-03	1.98E-04	0.47	6.58E-03	42.3
80	6	24.5	2778	1.05	0.21	0.83	8.15E-03	3.21E-04	0.1	1.12E+04	10
	1	1.83E-03	64.3	0.39	0.06	0.98	5.28E-03	3.78E-04	0.43	6.30E-03	49.7
80	7	25.3	2482	0.87	0.14	0.96	8.20E-03	4.47E-04	0.09	1.04E+04	6
	1	1.89E-03	64.5	0.29	0.04	0.85	5.83E-03	3.98E-04	0.39	6.08E-03	41.6
80	8	26.4	2087	0.63	0.07	0.79	8.07E-03	5.03E-04	0.07	9.05E+03	NA
	1	1.97E-03	64.7	0.18	0.03	0.78	7.09E-03	4.99E-04	0.33	5.87E-03	44.8
80	9	29.1	0	0	0	0					NA
	1	2.17E-03	65.1	0	0	0			0	5.36E-03	
81	1	29.1	0	0	0	0					NA
	1	2.17E-03	65.1	0	0	0			0	5.36E-03	
81	2	31.3	2087	0.76	0.09	0.28	8.31E-03	1.53E-04	0.08	1.06E+04	0.6
	1	2.34E-03	65.5	0.22	0.03	0.7	6.33E-03	3.81E-04	0.33	4.99E-03	68.1
81	3	32.7	2483	1.09	0.19	0.52	8.05E-03	1.93E-04	0.1	1.32E+04	NA
	1	2.43E-03	65.7	0.39	0.05	1.13	5.03E-03	4.14E-04	0.39	4.78E-03	65
81	4	33.7	2778	1.45	0.29	0.46	8.29E-03	1.32E-04	0.12	1.53E+04	9.6
	1	2.51E-03	65.9	0.54	0.08	1.36	4.40E-03	3.85E-04	0.43	4.62E-03	71.1
81	5	34.9	2977	1.81	0.38	0.47	8.74E-03	1.14E-04	0.14	1.69E+04	12.4
	1	2.60E-03	66.1	0.67	0.11	0.88	4.09E-03	2.12E-04	0.46	4.49E-03	61.8
81	6	36	2777	1.54	0.31	0.67	8.30E-03	1.79E-04	0.12	1.62E+04	8.5
	1	2.68E-03	66.3	0.59	0.09	1.46	4.30E-03	3.90E-04	0.43	4.36E-03	65.3
81	7	37.1	2482	1.25	0.22	0.84	8.18E-03	2.73E-04	0.11	1.49E+04	6.4
	1	2.76E-03	66.4	0.47	0.06	1.27	4.75E-03	4.16E-04	0.39	4.24E-03	56.7
81	8	38.1	2086	0.79	0.12	1.03	7.16E-03	4.61E-04	0.08	1.29E+04	3.3
	1	2.84E-03	66.5	0.3	0.03	1.28	5.62E-03	5.75E-04	0.33	4.12E-03	51.3
81	9	41.1	0	0	0	0					NA

run	point	p [mbar]	RPM [~]	T [lb]	P [hp]	Mx [in-lb]	CT [~]	CMx [~]	FM [~]	Re.75 [~]	V [ft/s]
	n [~]	rho [lb/ft3]	T [F]	Q [ft-lb]	Pi [hp]	My [in-lb]	CP [~]	CMy [~]	Mtip [~]	nu [ft2/s]	phi [deg]
	1	3.05E-03	66.8	0	0	0			0	3.83E-03	
82	1	50.8	0	0	0	0					NA
	1	3.77E-03	67.3	0	0	0			0		
82	2	68.4	2088	1.72	0.21	1.07	9.18E-03	2.83E-04	0.15	2.19E+04	152.7
	1	5.08E-03	67.5	0.54	0.08	0.8	4.10E-03	2.13E-04	0.33	2.43E-03	37
82	3	99.3	2088	2.64	0.33	1.19	9.74E-03	2.18E-04	0.19	3.17E+04	114.1
	1	7.35E-03	68.7	0.84	0.12	0.92	3.49E-03	1.68E-04	0.33	1.68E-03	37.6
82	4	130.6	2088	3.64	0.45	0.84	1.02E-02	1.17E-04	0.23	4.14E+04	84.8
	1	9.64E-03	71.1	1.13	0.17	0.81	3.16E-03	1.13E-04	0.32	1.28E-03	44
82	5	162.2	2088	4.69	0.56	0.69	1.07E-02	7.78E-05	0.27	5.10E+04	68.3
	1	1.19E-02	73.7	1.41	0.23	1.25	2.94E-03	1.41E-04	0.32	1.04E-03	61.2
82	6	196.4	2088	5.77	0.68	0.5	1.09E-02	4.73E-05	0.29	6.14E+04	56.7
	1	1.44E-02	76	1.72	0.28	1.43	2.78E-03	1.35E-04	0.32	8.66E-04	70.6
82	7	228.1	2088	6.77	0.82	0.43	1.11E-02	3.48E-05	0.3	7.09E+04	48.8
	1	1.66E-02	77.9	2.06	0.34	1.76	2.74E-03	1.43E-04	0.32	7.50E-04	76.3
82	8	260.2	2088	7.68	0.93	0.71	1.10E-02	5.06E-05	0.31	8.04E+04	43.1
	1	1.89E-02	79.5	2.34	0.38	2.07	2.64E-03	1.48E-04	0.32	6.61E-04	71.1
82	9	292.3	2088	8.7	1.03	0.42	1.11E-02	2.67E-05	0.33	9.00E+04	38.7
	1	2.12E-02	80.8	2.59	0.43	2.54	2.55E-03	1.62E-04	0.32	5.90E-04	80.6
82	10	324.6	2088	9.77	1.13	-0.36	1.13E-02	-2.06E-05	0.34	9.96E+04	35.3
	1	2.35E-02	82	2.85	0.49	2.65	2.48E-03	1.52E-04	0.32	5.34E-04	97.7
82	11	355.6	2088	10.78	1.23	-1.18	1.14E-02	-6.19E-05	0.35	1.09E+05	32.6
	1	2.57E-02	83	3.1	0.54	2.62	2.43E-03	1.38E-04	0.32	4.89E-04	114.2
82	12	387.8	2087	11.79	1.34	-1.42	1.15E-02	-6.87E-05	0.36	1.18E+05	30.4
	1	2.79E-02	83.8	3.36	0.59	3.1	2.38E-03	1.50E-04	0.32	4.49E-04	114.7
82	13	420.7	2087	12.76	1.44	-1.95	1.14E-02	-8.70E-05	0.37	1.28E+05	28.3

run	point	p [mbar]	RPM [~]	T [lb]	P [hp]	Mx [in-lb]	CT [~]	CMx [~]	FM [~]	Re.75 [~]	V [ft/s]
	n [~]	rho [lb/ft3]	T [F]	Q [ft-lb]	Pi [hp]	My [in-lb]	CP [~]	CMy [~]	Mtip [~]	nu [ft2/s]	phi [deg]
	1	3.03E-02	84.4	3.63	0.64	2.96	2.34E-03	1.32E-04	0.32	4.15E-04	123.4
82	14	450.6	2087	13.74	1.52	-2.23	1.15E-02	-9.27E-05	0.38	1.37E+05	26.9
	1	3.24E-02	85	3.83	0.69	3.78	2.29E-03	1.57E-04	0.32	3.88E-04	120.5
82	15	483.1	2087	14.72	1.62	-3.24	1.15E-02	-1.26E-04	0.39	1.47E+05	25.6
	1	3.47E-02	85.5	4.07	0.74	3.89	2.25E-03	1.51E-04	0.32	3.62E-04	129.8
82	16	521.6	2087	16.05	1.75	-4.43	1.16E-02	-1.60E-04	0.4	1.58E+05	24.2
	1	3.74E-02	86.1	4.4	0.82	3.91	2.23E-03	1.41E-04	0.32	3.36E-04	138.5
82	17	551.4	2086	17.2	1.86	-5.48	1.18E-02	-1.87E-04	0.41	1.67E+05	23.4
	1	3.95E-02	86.6	4.67	0.88	4.08	2.22E-03	1.39E-04	0.32	3.18E-04	143.4
82	18	584.1	2086	18.14	1.94	-5.74	1.18E-02	-1.85E-04	0.41	1.76E+05	22.5
	1	4.18E-02	86.9	4.87	0.93	4.57	2.18E-03	1.47E-04	0.32	3.01E-04	141.5
82	19	612.8	2086	19.04	2.04	-6.3	1.18E-02	-1.94E-04	0.42	1.85E+05	21.7
	1	4.39E-02	87.2	5.14	0.97	4.72	2.17E-03	1.45E-04	0.32	2.87E-04	143.1
82	20	644.4	2086	20	2.12	-5.84	1.18E-02	-1.71E-04	0.42	1.94E+05	20.8
	1	4.61E-02	87.4	5.34	1.02	5.33	2.14E-03	1.56E-04	0.32	2.73E-04	137.6
82	21	678.5	2086	21.21	2.22	-7.31	1.19E-02	-2.03E-04	0.43	2.04E+05	20.3
	1	4.85E-02	87.6	5.6	1.09	5.38	2.12E-03	1.50E-04	0.32	2.60E-04	143.6
82	22	706.5	2085	22.35	2.32	-8.6	1.20E-02	-2.30E-04	0.44	2.13E+05	19.9
	1	5.05E-02	87.8	5.84	1.15	5.37	2.12E-03	1.44E-04	0.32	2.49E-04	148
82	23	736.9	2085	23.47	2.41	-9.6	1.21E-02	-2.46E-04	0.45	2.22E+05	19.5
	1	5.27E-02	87.8	6.06	1.22	5.84	2.10E-03	1.50E-04	0.32	2.39E-04	148.7
82	24	760.3	2084	24.15	2.47	-9	1.21E-02	-2.24E-04	0.45	2.29E+05	18.9
	1	5.44E-02	87.8	6.22	1.25	6.66	2.08E-03	1.66E-04	0.32	2.32E-04	143.5
82	25	783.9	2084	25.01	2.54	-9.4	1.21E-02	-2.27E-04	0.46	2.36E+05	18.8
	1	5.60E-02	87.8	6.41	1.3	7.36	2.07E-03	1.78E-04	0.32	2.25E-04	142
82	26	806.1	2084	25.83	2.63	-10.53	1.22E-02	-2.47E-04	0.46	2.43E+05	18.1
	1	5.76E-02	87.8	6.64	1.34	7.32	2.08E-03	1.72E-04	0.32	2.19E-04	145.2

run	point	p [mbar]	RPM [~]	T [lb]	P [hp]	Mx [in-lb]	CT [~]	CMx [~]	FM [~]	Re.75 [~]	V [ft/s]
	n [~]	rho [lb/ft3]	T [F]	Q [ft-lb]	Pi [hp]	My [in-lb]	CP [~]	CMy [~]	Mtip [~]	nu [ft2/s]	phi [deg]
82	27	828.1	2084	26.66	2.68	-10.33	1.23E-02	-2.36E-04	0.47	2.49E+05	18.1
	1	5.92E-02	87.7	6.75	1.39	7.82	2.06E-03	1.79E-04	0.32	2.13E-04	142.9
82	28	849.3	2084	27.45	2.74	-11.37	1.23E-02	-2.53E-04	0.47	2.56E+05	17.8
	1	6.08E-02	87.6	6.91	1.43	7.72	2.05E-03	1.72E-04	0.32	2.07E-04	145.8
82	29	874.5	2084	28.29	2.83	-11.28	1.23E-02	-2.44E-04	0.47	2.64E+05	17.3
	1	6.26E-02	87.3	7.13	1.48	8.37	2.04E-03	1.81E-04	0.32	2.01E-04	143.4
82	30	896.6	2084	29.08	2.9	-11.37	1.23E-02	-2.40E-04	0.48	2.71E+05	17.1
	1	6.42E-02	87	7.31	1.52	8.61	2.04E-03	1.82E-04	0.32	1.96E-04	142.8
82	31	912.5	2083	29.66	2.97	-11.54	1.24E-02	-2.39E-04	0.48	2.76E+05	16.8
	1	6.54E-02	86.7	7.48	1.55	8.11	2.04E-03	1.68E-04	0.32	1.92E-04	144.9
82	32	931.1	2083	30.18	3.02	-12.02	1.23E-02	-2.44E-04	0.47	2.82E+05	16.9
	1	6.67E-02	86.4	7.63	1.58	8.83	2.04E-03	1.79E-04	0.32	1.88E-04	143.7
82	33	944.2	2083	30.87	3.08	-13.04	1.24E-02	-2.61E-04	0.48	2.86E+05	16.6
	1	6.77E-02	86.1	7.78	1.62	8.58	2.05E-03	1.72E-04	0.32	1.86E-04	146.7
82	34	957.4	2083	31.3	3.11	-12.61	1.24E-02	-2.49E-04	0.48	2.90E+05	16.6
	1	6.87E-02	85.8	7.84	1.64	9.44	2.03E-03	1.86E-04	0.32	1.83E-04	143.2
82	35	972.9	2083	31.95	3.18	-13.67	1.25E-02	-2.65E-04	0.48	2.95E+05	16.3
	1	6.99E-02	85.4	8.03	1.68	9.6	2.04E-03	1.86E-04	0.32	1.80E-04	144.9
82	36	981.9	2083	32.39	3.21	-14.21	1.25E-02	-2.73E-04	0.49	2.98E+05	16.3
	1	7.06E-02	85.1	8.11	1.7	9.34	2.04E-03	1.79E-04	0.32	1.78E-04	146.7
82	37	989.9	2083	32.53	3.21	-13.05	1.25E-02	-2.48E-04	0.49	3.01E+05	16.2
	1	7.12E-02	84.7	8.1	1.71	10.76	2.02E-03	2.05E-04	0.32	1.76E-04	140.5
82	38	997.2	2082	33.18	3.26	-14.82	1.26E-02	-2.80E-04	0.49	3.03E+05	16
	1	7.18E-02	84.3	8.23	1.75	10.62	2.04E-03	2.01E-04	0.32	1.75E-04	144.4
82	39	1002.8	2082	33.14	3.26	-14.31	1.25E-02	-2.68E-04	0.49	3.06E+05	16.1
	1	7.22E-02	83.9	8.23	1.74	10.96	2.02E-03	2.06E-04	0.32	1.73E-04	142.5
82	40	1007.3	2082	33.17	3.29	-12.52	1.25E-02	-2.34E-04	0.48	3.07E+05	15.7

run	point	p [mbar]	RPM [~]	T [lb]	P [hp]	Mx [in-lb]	CT [~]	CMx [~]	FM [~]	Re.75 [~]	V [ft/s]
	n [~]	rho [lb/ft3]	T [F]	Q [ft-lb]	Pi [hp]	My [in-lb]	CP [~]	CMy [~]	Mtip [~]	nu [ft2/s]	phi [deg]
	1	7.26E-02	83.5	8.31	1.74	10.93	2.03E-03	2.04E-04	0.32	1.72E-04	138.9
82	41	1010.9	2082	33.61	3.31	-15.06	1.26E-02	-2.80E-04	0.49	3.09E+05	15.9
	1	7.29E-02	83.1	8.35	1.77	11.07	2.03E-03	2.06E-04	0.32	1.72E-04	143.7
82	42	1013.5	2082	33.69	3.31	-14.15	1.26E-02	-2.62E-04	0.49	3.10E+05	15.5
	1	7.32E-02	82.7	8.35	1.77	11.1	2.02E-03	2.06E-04	0.32	1.71E-04	141.9
82	43	1018.8	1495	16.64	1.21	-2.66	1.19E-02	-9.48E-05	0.43	2.24E+05	11.1
	1	7.37E-02	81.8	4.24	0.61	5.77	2.14E-03	2.06E-04	0.23	1.70E-04	114.7
82	44	1018.8	1003	6.84	0.35	-1.91	1.09E-02	-1.52E-04	0.33	1.51E+05	6.9
	1	7.38E-02	81.1	1.85	0.16	1.87	2.47E-03	1.48E-04	0.15	1.69E-04	135.6
82	45	1018.8	0	0	0	0					NA
	1	7.39E-02	80.1	0	0	0			0	1.69E-04	